PRODUCT CATALOGUE 2026

FIBOX
Enclosing innovations



ARCA IEC

Robust protection. Maximum flexibility.

CONTENT

ABOUT US 4

MARKETS & INDUSTRIES 6

MECHANICAL PROCESSING 8

ARCA IEC 10

CABINET SERIES OVERVIEW 12

SPECIFICATIONS 14

SYSTEM OVERVIEW 16

PRODUCT INFORMATION 18

ACCESSORY INFORMATION 19

QUICK OVERVIEW 20

200 X 300 X 150 MM 22

300 X 200 X 150 MM 24

300 X 200 X 210 MM 26

300 X 400 X 150 MM 28

300 X 400 X 210 MM 30

400 X 300 X 150 MM 32

400 X 300 X 210 MM 34

400 X 400 X 210 MM 36

400 X 500 X 210 MM 38

400 X 600 X 210 MM 40

500 X 400 X 210 MM 42

500 X 500 X 210 MM 44

500 X 700 X 300 MM 46

600 X 400 X 210 MM 48

600 X 800 X 300 MM 50

700 X 500 X 300 MM 52

800 X 600 X 300 MM 54

ADDITIONAL ACCESSORIES 56

LOCATIONS 62

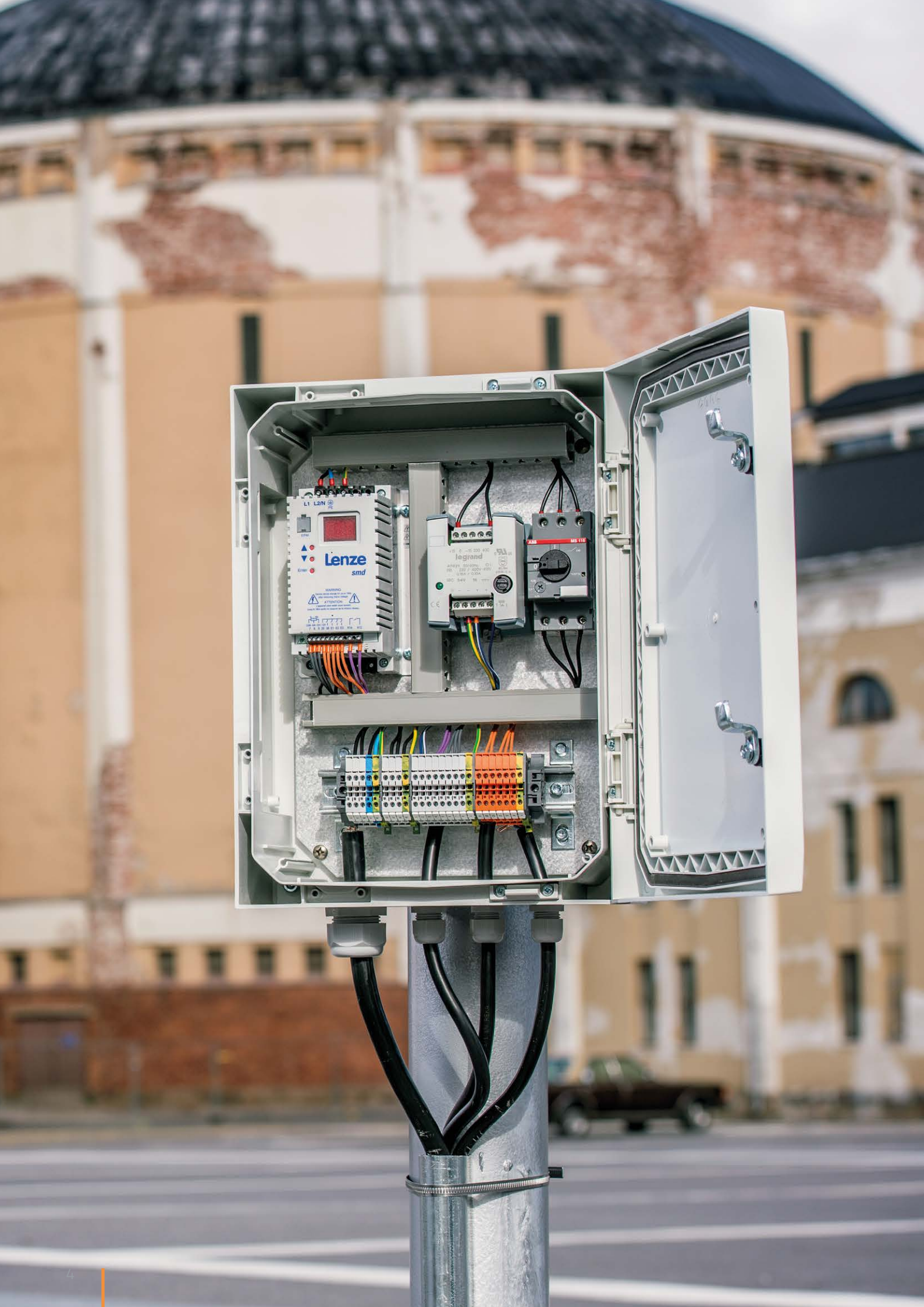
L1 L2/N
Lenze
smd
legrand
ABB
MS 116

60 YEARS OF INDUSTRY EXPERIENCE

Your leading global provider of enclosure solutions

In 1966, FIBOX pioneered the industry by introducing the world's first injection-moulded polycarbonate (PC) enclosure, marking the beginning of a new era in enclosure solutions. Today, Fibox is a global leader in enclosure solutions, and we are present in all major industrial markets. We remain true to our Finnish roots and emphasize simple, Nordic design in our products. At our headquarters in Finland, we develop durable and advanced products that protect power distribution, control systems, and electronic equipment from the challenges of demanding conditions.

All the products we manufacture are durable and designed for a long service life. Efficiency is important to us, and we are committed to protecting our planet by conserving energy and natural resources. Together towards a greener future!

Fibox aims to maintain its commitment to innovation and technological leadership in order to further develop solutions that support the success of our partners and customers. To achieve this, we continuously invest in research and development. By integrating the latest technologies into our enclosure solutions, we can offer our customers innovative and sustainable options. In addition to designing and manufacturing customized plastic and aluminum enclosures, we also provide fully tested electrical and automation systems.

MARKETS & INDUSTRIES

Solutions for challenging environments

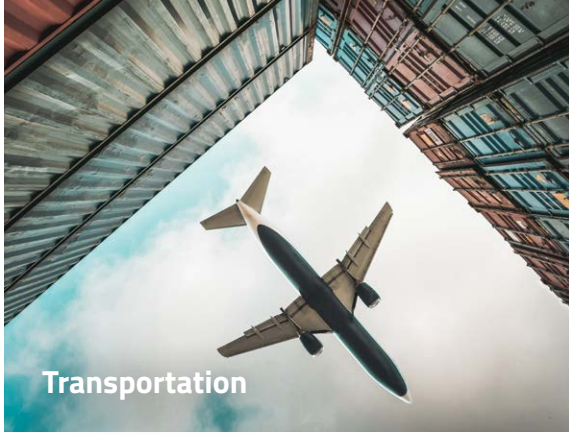



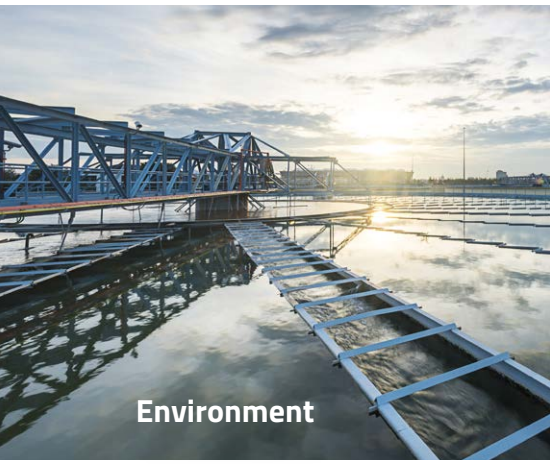

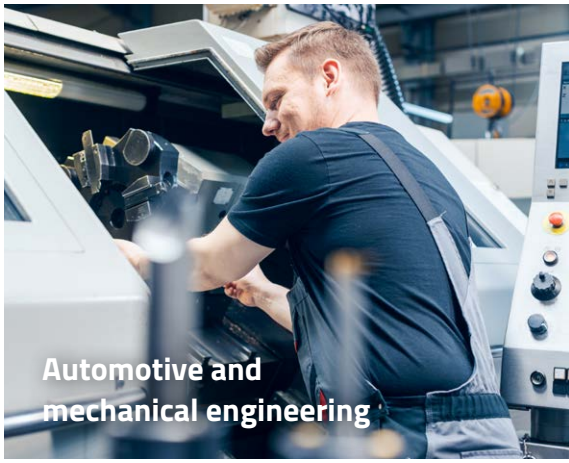

Whatever the application, the Fibox enclosure range includes an enormous number of high-quality enclosures to protect electrical and electronic components and systems. We supply all standard enclosures directly from stock or customized enclosures ready for assembly according to your specifications. Individual requirements are the focus of our work.

In addition to the special surface treatment or enclosures made of colored material, Fibox also offers customer-specific special enclosures. All products are designed and developed in close cooperation with our customers. Thanks to the valuable feedback from our constantly growing customer network, we are able to continuously develop new products as well as value-adding services and solutions.

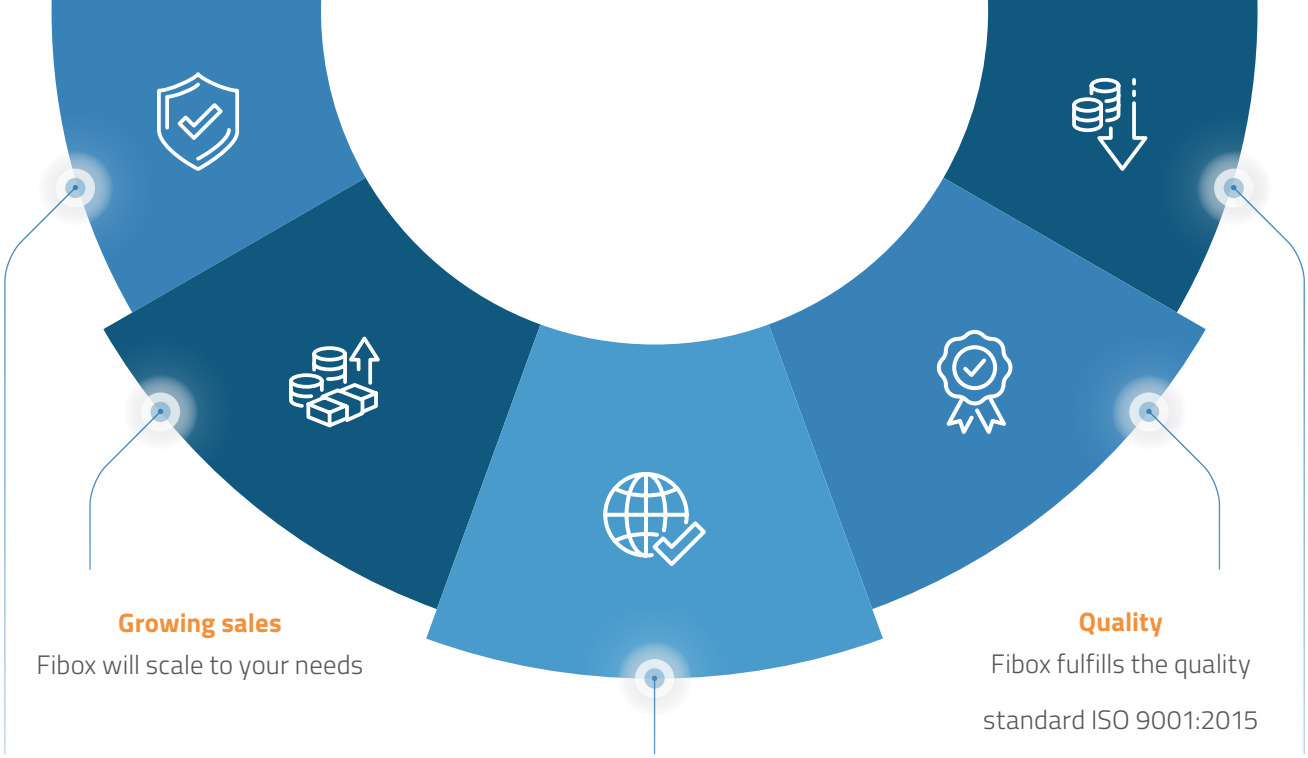

Growing sales

Fibox will scale to your needs

Quality

Fibox fulfills the quality standard ISO 9001:2015

Top-class enclosure technology

Fibox offers reliable protection for your product innovations

Shorter delivery and lead times

Worldwide Fibox Service

Reduction of the investment risk

Fibox shares the investment costs with you





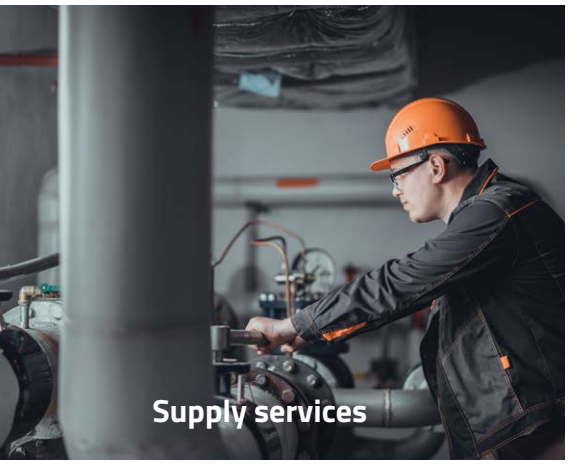

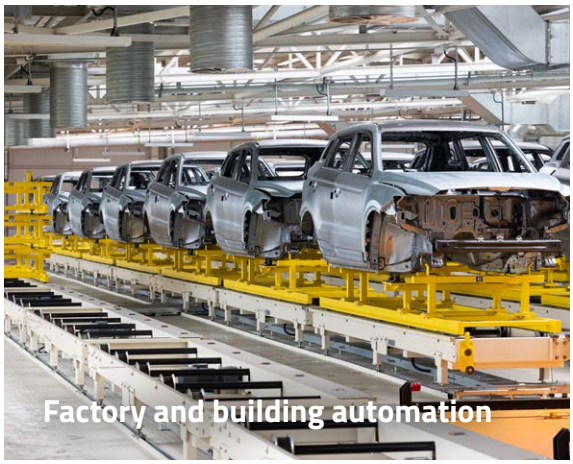

FIBOX CUSTOMIZING SERVICES

INDIVIDUAL CUSTOMIZING SERVICE

We are driven by the desire to offer you a product that is in line with your vision. "One Fibox" is our promise for maximum added value. As specialists in our field, we have the expertise to fully understand your requirements in order to offer you more than just an application solution.

With our individual customizibg service, we go far beyond our product portfolio and offer you customised solutions for all FIBOX enclosures.

The enclosures can be machined, painted or printed using state-of-the-art technology. The FIBOX mounting service allows you to shorten manufacturing processes and save costs.







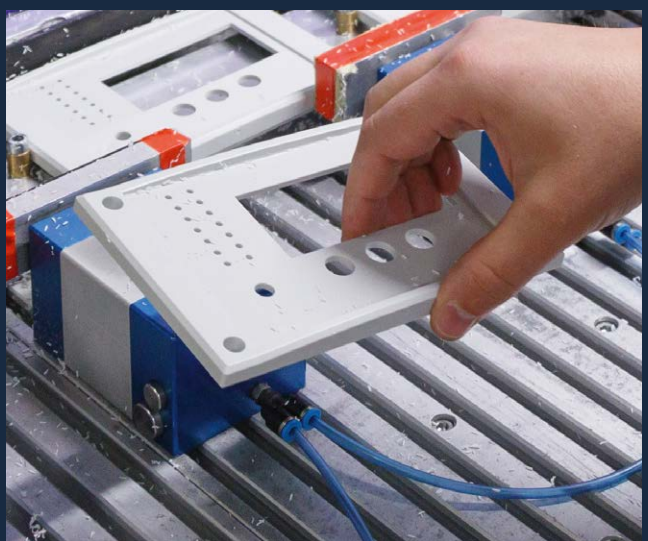



Mechanical processing

Benefit from our numerous customisation options, such as drilling, milling or other mechanical processing.

Tool modification

Faster processes with the right tool? For our OEM enclosure series, we modify existing tools for standard enclosures as from certain quantities.

Painting & printing in special colors

In addition to the possibility of ordering enclosures in many colours of your choice, we also offer individual printing or painting according to your specifications according on the quantity.

✓ **EMC optimisation:** Depending on your requirements, we offer you various methods for EMC optimisation of your enclosure.

Assembly service

We install both third-party and Fibox accessories and deliver your enclosures fully pre-assembled and ready for connection.

Simplier logistics
Ready solution available with single order globally.

Reliable solution
Our advantage is 30 years of experience.

Less risk
Solutions implemented by experts.

Cut costs
Combine design and manufacturing to save time and money.

CHAPTER

ARCA IEC

ARCA IEC

Robust protection. Maximum flexibility.

ARCA IEC combines robust protection with the advantages of glass-fibre reinforced polycarbonate. Corrosion-free, lightweight and highly impact-resistant, the range is designed for demanding indoor and outdoor applications while offering maximum flexibility for installation and configuration.

DISCOVER
and learn more about our product range or visit **fibox.com**

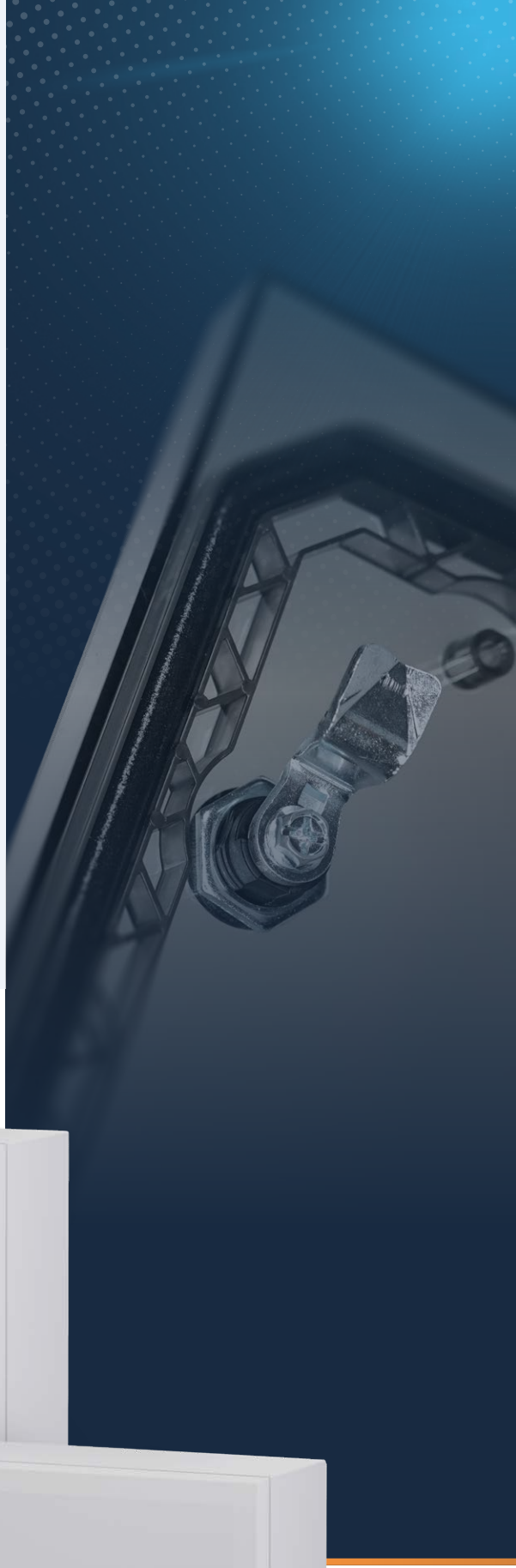







Protection in demanding environments

ROBUST & PROTECTIVE

High impact resistance and protection up to IP66 and IK10 help keep sensitive equipment safe from dust, water and mechanical impact.

CORROSION-FREE

No rust and no additional corrosion protection required, making ARCA IEC ideal for humid, exposed and demanding environments.

BUILT FOR INDOOR & OUTDOOR

UV and weather resistance combined with a wide operating temperature range ensure reliable performance across diverse applications.

LIGHTWEIGHT & FLEXIBLE

Easy to handle, install and modify, with versatile mounting options and an extensive range of accessories for individual configurations.

ELECTRICALLY INSULATING

The polycarbonate material provides electrical insulation suitable for Class II assemblies, offering an inherent advantage over metal enclosures.

MODULAR & VERSATILE

Mounting plates, DIN rail frames, inner doors and a broad range of accessories enable flexible configurations for different equipment and applications.

Typical applications

OEM & SERIES MANUFACTURING

RENEWABLE ENERGY

TELECOMMUNICATION

TRANSPORTATION & INFRASTRUCTURE

WATER & WASTEWATER INDUSTRY

BUILDING AUTOMATION & SMART BUILDINGS

ARCA IEC

High-quality wall-mounted cabinets

Outstanding performance and safety in highly demanding environments.
Easy to handle. Quick to install. All of this is the result of innovative, market-driven product development. ARCA IEC is a corrosion-resistant and cost-effective alternative to sheet steel wall-mounted cabinets for use in harsh and demanding environments. ARCA combines the proven properties of sheet steel cabinets with the advantages of high-quality thermoplastic materials.



Fibox supports a wide range of industries.

Fibox is a trusted partner across a wide range of industries. Our flexible approach and innovative solutions help us meet the needs of customers in diverse sectors. Whatever your industry, we're here to help you succeed.


Telecom & Data


Traffic & Mobility


Building automation


Environment & Water


Factory automation


Machine building


Energy

Includes:
- Cabinet base
- Grey door with PUR gasket
- Mounting plate
- Screws for mounting plate
- 3 mm double-bit lock with key(s)
- Door guide
- S versions with swing handle 2-point locking system
- W versions with transparent window
- T version with transparent door

Technical informations	
Dimensions	200 x 300 x 150 mm – 800 x 600 x 300 mm
Material	Glass fibre reinforced polycarbonate
Ingress protection (en 60529)	IP 66 (IP65 W and S versions)
Impact resistance (en 62262)	IK 10 +35 °c / IK 09 -25 °c /IK 09 T versions IK 08 w-versions
Temperature range celsius (continuous)	-40° – +80 °C
Fahrenheit	-40° – +175 °F
Electrical insulation	Totally insulated (Suitable for Class II assemblies)
Light grey parts colour	RAL 7035 (industry grey)
Glow wire test (iec 695-2-1)	960°
Flammability rating (material)	UL 94-5VA
Non-toxicity	Halogen free (din/vde 0472, part 815)
UV resistance	UL 508; 720 hours in «weatherometer»
Gasket	PUR
Chemical resistance	Good
Note	Data subject to change without notice.

Conformity to standard/directives:
- EN/IEC 62208, EN/IEC 61439-1-4
- Low Voltage Directive 2014/35/EU (up to 1500 VCD)
- RoHS directive 2011/65/EU, 2015/863
- UL Type 1, 4, 4X, 12 and 13; W versions UL Type 1; UL File E75645 Vol 1 Sec 10


Corrosion-resistant


Patented hinge design


Robust corner design

ARCA IEC

High-quality wall-mounted cabinets

Cabinet:

1 Cabinet base
2 Door with PUR gasket and locks, various options

Accessories:

3 Wall mounting lugs, stainless steel or plastic (4 pcs. incl screws)
4 Mounting plate, electro-galvanized steel or insulated, various options
5 DIN rail set with front plate
6 Inner door
7 Pole mounting set (2 pcs.)

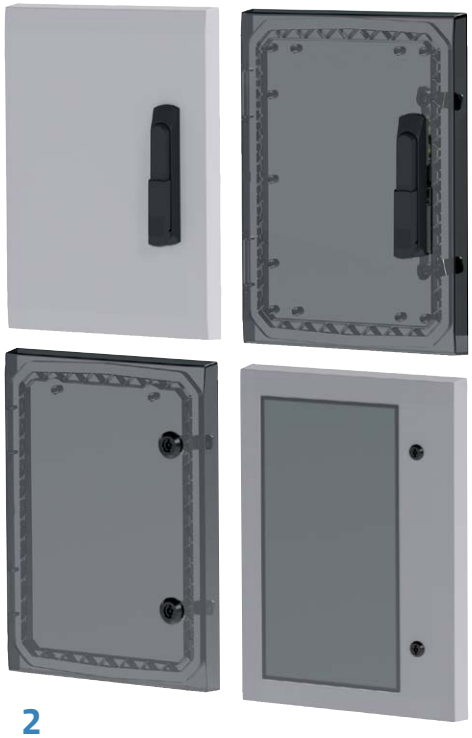

2



6



5













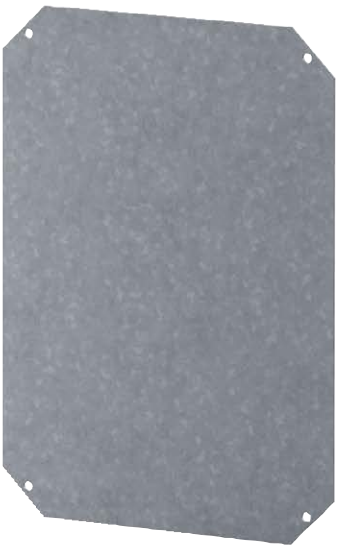





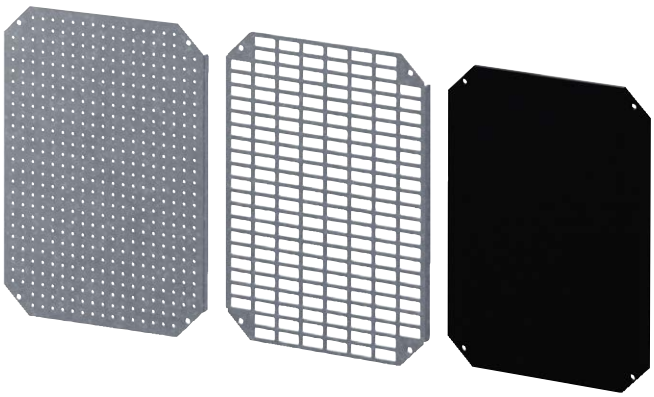

More informations to ARCA IEC

ARCA IEC

Product informations

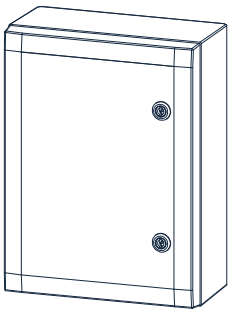

Point locking

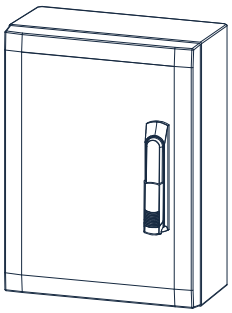

Swing handle

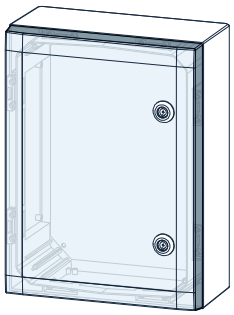

Transparent door with point locking

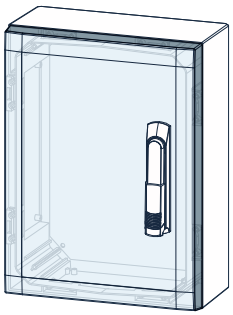

Transparent door with swing handle

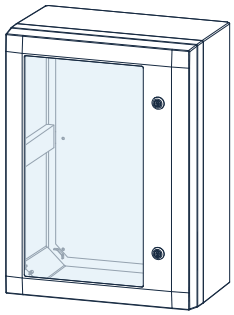

Window door

Door
- Door opening angle 120°
- Left/ right turning option
- Pre-formed fixing studs inside
- Easy access to the contents
- Door stop available
- Easy assembly and refined appearance

Door guide
- Secure closing
- Precise door alignment

Cabinet base
The main body of the Fibox ARCA cabinet is made from rugged polycarbonate which offers many benefits:
- Non corrosive
- High impact resistance
- Low maintenance
- UV resistant
- Aesthetically pleasing

Declined design on base
- Better waterproofing
- Minimizes dirt and water build-up

Patent hinge design
- Easy assembly and refined appearance
- Quick and convenient door installation

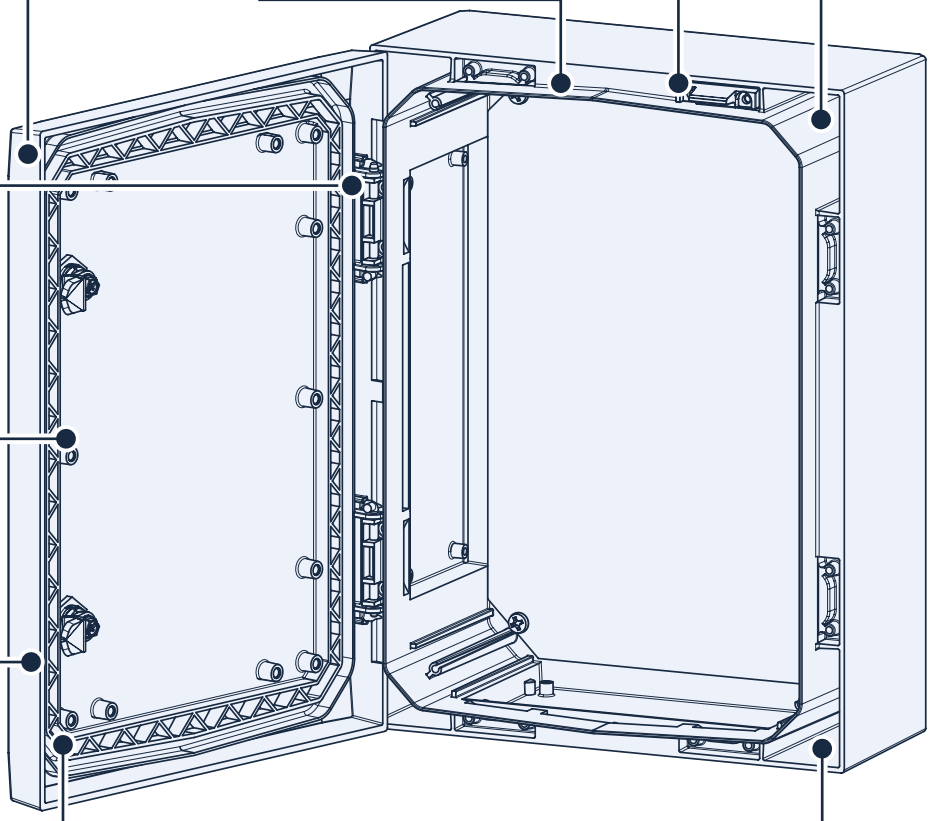

Mounting pods
- Integrated mounting points for internal components
- Quick and secure component installation

Gasket
- Wide and secured gasket with PUR material for high quality sealing

Special molded rib design
- For making the cabinet extra stabile and solid

Corner design
- Double corner to secure fixing without destroying the IP/IK
- Robust and rigid cabinet

ARCA IEC

Accessory informations

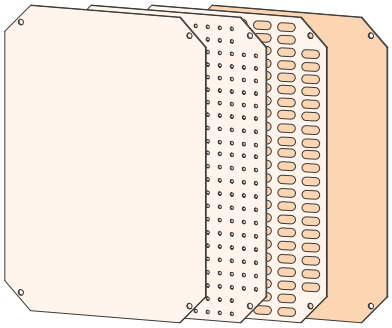

Mounting plate

- Galvanized steel, plain and perforated options (MPS, MPP, MPMP)*
- Resin bonded paper board (MPX)*

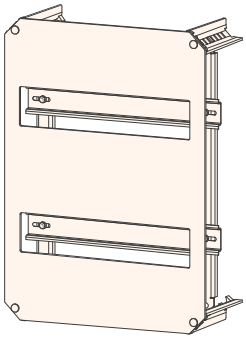

Din rail frame set (DRS)*

- Including DIN rail frame, front plate, corner brackets and screws for installation
- Easy and quick installation

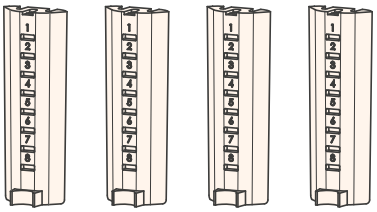

Corner adjustment sets (CBS)*

- Easy to assemble the mounting plate to desired depth with special corner brackets

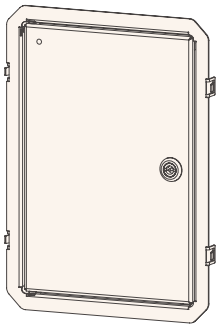

Inner door (IDS)*

- No tools needed for installation
- Lockable

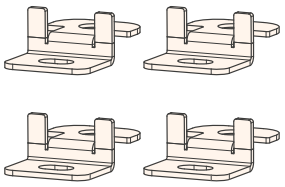

Wall mounting lugs (WMK)*

- 2 depths (10 and 40 mm) in stainless 316 steel

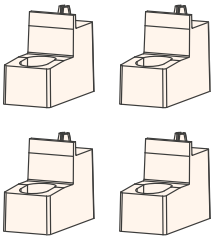

Plastic wall mounting lugs set (WMKQ)*

- Adds 10 and 50 mm between wall and cabinet

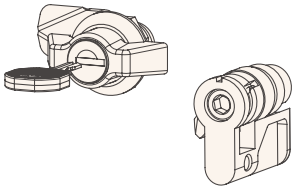

Locking (LIS+CLI)*

- Changeable lock inserts for point and swing handle locking

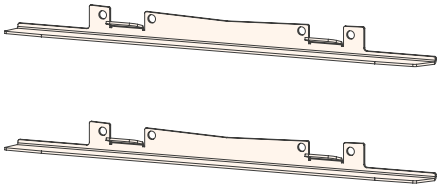

Rain canopy set (RCS)*

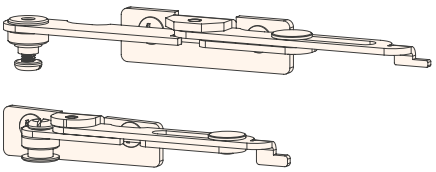

Door stopper (DSP)*

*Accessory sold separately

ARCA IEC

	Cabinets					Mounting plate			
	point locking grey door	swing handle grey door	point locking transparent door	swing handle transparent door	point locking door with window	plain galvanized steel, 2 mm	perforated galvanized steel, 2 mm	multiperforated galvanized steel, 2 mm	resin bonded paper board
									
dimensions **overall external** (overall internal)									
H x W x D (mm)	**Code**	**Code**	**Code**	**Code**	**Code**	**Code**	**Code**	**Code**	**Code**
200 x 300 x 150 (160 x 260 x 140)	8120020 8120020N		8121020 8121020N			8120731	8120930	8120920	8120741
300 x 200 x 150 (260 x 160 x 140)	8120002 8120002N		8121002 8121002N			8120731	8120751	8120920	8120741
300 x 300 x 210 (260 x 260 x 200)	8120005 8120005N		8121005 8121005N			8120732	8120752	8120921	8120742
300 x 400 x 150 (260 x 360 x 140)	8120022 8120022N		8121022 8121022N			8120733	8120931	8120922	8120743
300 x 400 x 210 (260 x 360 x 200)	8120023 8120023N		8121023 8121023N			8120733	8120931	8120922	8120743
400 x 300 x 150 (360 x 260 x 140)	8120006 8120006N	8120086 8120086N	8121006 8121006N	8121086 8121086N		8120733	8120753	8120922	8120743
400 x 300 x 210 (360 x 260 x 200)	8120007 8120007N	8120087 8120087N	8121007 8121007N	8121087 8121087N		8120733	8120753	8120922	8120743
400 x 400 x 210 (360 x 360 x 200)	8120009 8120009N	8120089 8120089N	8121009 8121009N	8121089 8121089N		8120734	8120754	8120923	8120744
400 x 500 x 210 (360 x 460 x 200)	8120025 8120025N	8120105 8120105N	8121025 8121025N	8121105 8121105N		8120735	8120932	8120924	8120745
400 x 600 x 210 (360 x 560 x 200)	8120026 8120026N	8120106 8120106N	8121026 8121026N	8121106 8121106N		8120736	8120933	8120925	8120746
500 x 400 x 210 (460 x 360 x 200)	8120011 8120011N	8120091 8120091N	8121011 8121011N	8121091 8121091N		8120735	8120755	8120924	8120745
500 x 500 x 210 (460 x 460 x 200)	8120032 8120032N	8120112 8120112N	8121032 8121032N	8121112 8121112N		8120730	8120750	8120929	8120740
500 x 700 x 300 (450 x 650 x 285)	8120031 8120031N	8120111 8120111N			8120151 8120151N	8120738	8120934	8120927	8120748
600 x 400 x 210 (560 x 360 x 200)	8120012 8120012N	8120092 8120092N	8121012 8121012N	8121092 8121092N		8120736	8120756	8120925	8120746
600 x 800 x 300 (550 x 750 x 285)	8120029 8120029N	8120109 8120109N			8120149 8120149N	8120739	8120935	8120928	8120749
700 x 500 x 300 (650 x 450 x 285)	8120017 8120017N	8120097 8120097N			8120137 8120137N	8120738	8120758	8120927	8120748
800 x 600 x 300 (750 x 550 x 285)	8120019 8120019N	8120099 8120099N			8120139 8120139N	8120739	8120759	8120928	8120749

N = no mounting plate

Inner door	DIN rail frame	Rain canopy	Pole mounting	Door stopper		
		stainless steel	for pole ø 100 – 300 mm	left	right	dimensions **overall external** (overall internal)
						
Code | set	**Code | set**	**Code | set**	**Code | kit**	**Code**	**Code**	**H x W x D (mm)**
8120910	8120791	8120940	8120841			**200 x 300 x 150** (160 x 260 x 140)
8120711	8120760	8120941	8120840			**300 x 200 x 150** (260 x 160 x 140)
8120712	8120763	8120943	8120841	8120960	8120961	**300 x 300 x 210** (260 x 260 x 200)
8120911	8120793	8120942	8120842	8120962	8120963	**300 x 400 x 150** (260 x 360 x 140)
8120911	8120794	8120942	8120842	8120962	8120963	**300 x 400 x 210** (260 x 360 x 200)
8120713	8120764	8120943	8120841	8120960	8120961	**400 x 300 x 150** (360 x 260 x 140)
8120713	8120765	8120943	8120841	8120960	8120961	**400 x 300 x 210** (360 x 260 x 200)
8120714	8120767	8120946	8120842	8120960	8120961	**400 x 400 x 210** (360 x 360 x 200)
8120912	8120796	8120944	8120843	8120962	8120963	**400 x 500 x 210** (360 x 460 x 200)
8120913	8120797	8120945	8120844	8120962	8120963	**400 x 600 x 210** (360 x 560 x 200)
8120715	8120769	8120946	8120842	8120960	8120961	**500 x 400 x 210** (460 x 360 x 200)
8120710	8120778	8120954	8120843	8120960	8120961	**500 x 500 x 210** (460 x 460 x 200)
8120914	8120790	8120947	8120845	8120964	8120965	**500 x 700 x 300** (450 x 650 x 285)
8120716	8120770	8120948	8120842	8120960	8120961	**600 x 400 x 210** (560 x 360 x 200)
8120915	8120800	8120949	8120846	8120964	8120965	**600 x 800 x 300** (550 x 750 x 285)
8120718	8120775	8120951	8120843	8120964	8120965	**700 x 500 x 300** (650 x 450 x 285)
8120719	8120777	8120950	8120844	8120964	8120965	**800 x 600 x 300** (750 x 550 x 285)

ARCA IEC

HxWxD: 200 x 300 x 150 mm



ARCA 203015



ARCA 203015T

Description	Order Symbol	Code
Grey door, 1-point locking, hinges on the short side	ARCA 203015	**8120020**
Grey door, 1-point locking, hinges on the short side, without mountingplate	ARCA 203015 No MP	**8120020N**
Transparent door, 1-point locking, hinges on the short side, with mountingplate	ARCA 203015T	**8121020**
Transparent door, 1-point locking, hinges on the short side, without mountingplate	ARCA 203015T No MP	**8121020N**

NO MP = no mounting plate

Cabinet base, door with PUR gasket, mounting plate, screws for mounting plate. 3mm double bit lock(s) with key.
S versions with swinghandle 2-point locking system. Door guide included.

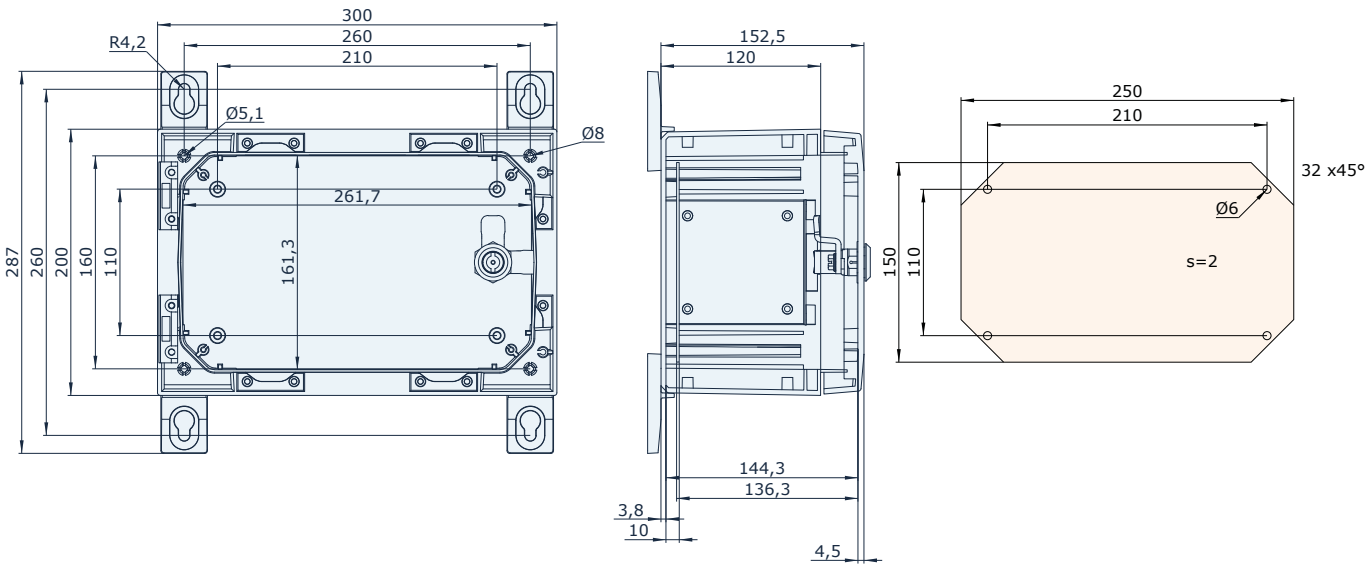

ARCA IEC

Accessories

	Description	Order Symbol	Code
	Mounting plate (250x150x2 mm) Galvanized steel, for sizes 200x300/300x200	MPS ARCA 3020	**8120731**
	Mounting plate perforated (250x150x2 mm - 26x11 mm) Galvanized steel, for size 200x300	MPP ARCA 2030	**8120930**
	Mounting plate multiperforated (250x150x2 mm - ø3.6 mm) Galvanized steel, for size 200x300/300x200	MPMP ARCA 3020	**8120920**
	Mounting plate (250x150 mm) Isolated, for size 200x300/300x200	MPX ARCA 3020	**8120741**
	Inner door set Galvanized steel door frames, door from aluminium, RAL 7035, for size 200x300x150	IDS ARCA 2030	**8120910**
	DIN rail frame set 1 row x 11 modules, for size 200x300x150	DRS ARCA 203015	**8120791**
	Rain canopy set for size 2030	RCS ARCA 2030	**8120940**
	Plastic rain canopy set for size 300mm width	RCSQ ARCA 30	**8120971**
	PoleMounting kit, for pole ø100-300mm For sizes 200x300, 400x300	PMK ARCA 30	**8120841**
	Wall mounting lugs set for 2030-6040 Adds 10 mm between wall and cabinet	WMK ARCA 10 SMALL	**8120830**
	Wall mounting lugs set for 2030-6040 Adds 40 mm between wall and cabinet	WMK ARCA 40 SMALL	**8120831**
	Plastic Wall mounting lugs set for 2030-6040 Adds 10 mm between wall and cabinet	WMKQ10S	**8120832**
	Plastic Wall mounting lugs set for 2030-6040 Adds 50 mm between wall and cabinet	WMKQ50S	**8120833**
	Corner adjustment set For sizes with depth 150	CBS ARCA 15	**8120810**

ARCA IEC

HxWxD: 300 x 200 x 150 mm



ARCA 302015



ARCA 302015T

Description	Order Symbol	Code
Grey door, 1-point locking, hinges on the long side	ARCA 302015	**8120002**
Grey door, 1-point locking, hinges on the long side, without mountingplate	ARCA 302015 No MP	**8120002N**
Transparent door, 1-point locking, hinges on the long side, with mountingplate	ARCA 302015T	**8121002**
Transparent door, 1-point locking, hinges on the long side, without mountingplate	ARCA 302015T No MP	**8121002N**

NO MP = no mounting plate

Cabinet base, door with PUR gasket, mounting plate, screws for mounting plate. 3mm double bit lock(s) with key.
S versions with swinghandle 2-point locking system. Door guide included.

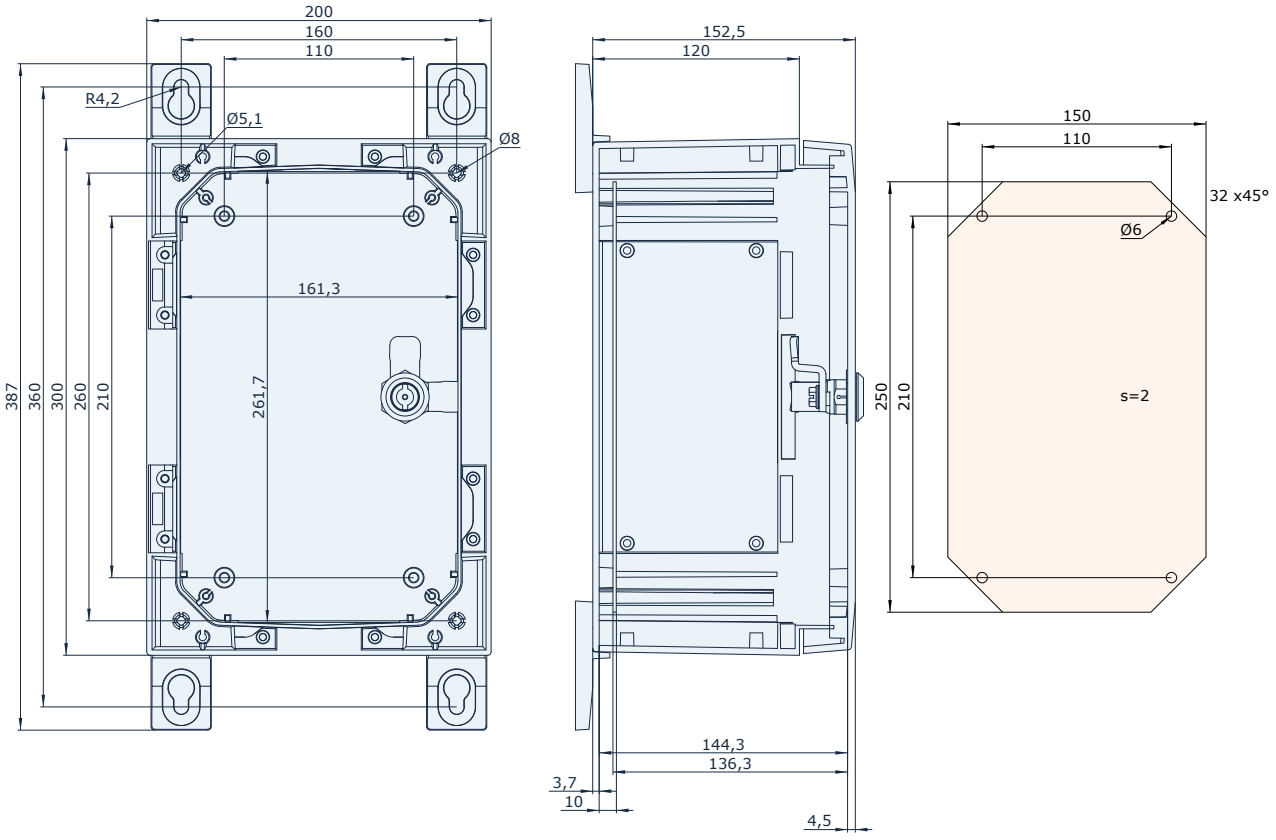

ARCA IEC

Accessories

	Description	Order Symbol	Code
	Mounting plate (250x150x2 mm) Galvanized steel, for sizes 200x300/300x200	MPS ARCA 3020	**8120731**
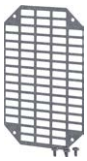	Mounting plate perforated (250x150x2 mm - 26x11 mm) Galvanized steel, for size 300x200	MPP ARCA 3020	**8120751**
	Mounting plate multiperforated (250x150x2 mm - ø3.6 mm) Galvanized steel, for size 200x300/300x200	MPMP ARCA 3020	**8120920**
	Mounting plate (250x150 mm) Isolated, for size 200x300/300x200	MPX ARCA 3020	**8120741**
	Inner door set Galvanized steel door frames, door from aluminium, RAL 7035, for size 300x200x150	IDS ARCA 3020	**8120711**
	DIN rail frame set 1 row x 5 modules, for size 300x200x150	DRS ARCA 302015	**8120760**
	Rain canopy set for size 3020	RCS ARCA 3020	**8120941**
	Plastic rain canopy set for size 200mm width	RCSQ ARCA 20	**8120970**
	PoleMounting kit, for pole ø100-300mm For size 300x200	PMK ARCA 20	**8120840**
	Wall mounting lugs set for 2030-6040 Adds 10 mm between wall and cabinet	WMK ARCA 10 SMALL	**8120830**
	Wall mounting lugs set for 2030-6040 Adds 40 mm between wall and cabinet	WMK ARCA 40 SMALL	**8120831**
	Plastic Wall mounting lugs set for 2030-6040 Adds 10 mm between wall and cabinet	WMKQ10S	**8120832**
	Plastic Wall mounting lugs set for 2030-6040 Adds 50 mm between wall and cabinet	WMKQ50S	**8120833**
	Corner adjustment set For sizes with depth 150	CBS ARCA 15	**8120810**

ARCA IEC

HxWxD: 300 x 300 x 210 mm



ARCA 303021



ARCA 303021T

Description	Order Symbol	Code
Grey door, 2-point locking	ARCA 303021	**8120005**
Grey door, 2-point locking, without mountingplate	ARCA 303021 No MP	**8120005N**
Transparent door, 2-point locking, with mountingplate	ARCA 303021T	**8121005**
Transparent door, 2-point locking, without mountingplate	ARCA 303021T No MP	**8121005N**

NO MP = no mounting plate

Cabinet base, door with PUR gasket, mounting plate, screws for mounting plate. 3mm double bit lock(s) with key.
S versions with swinghandle 2-point locking system. Door guide included.

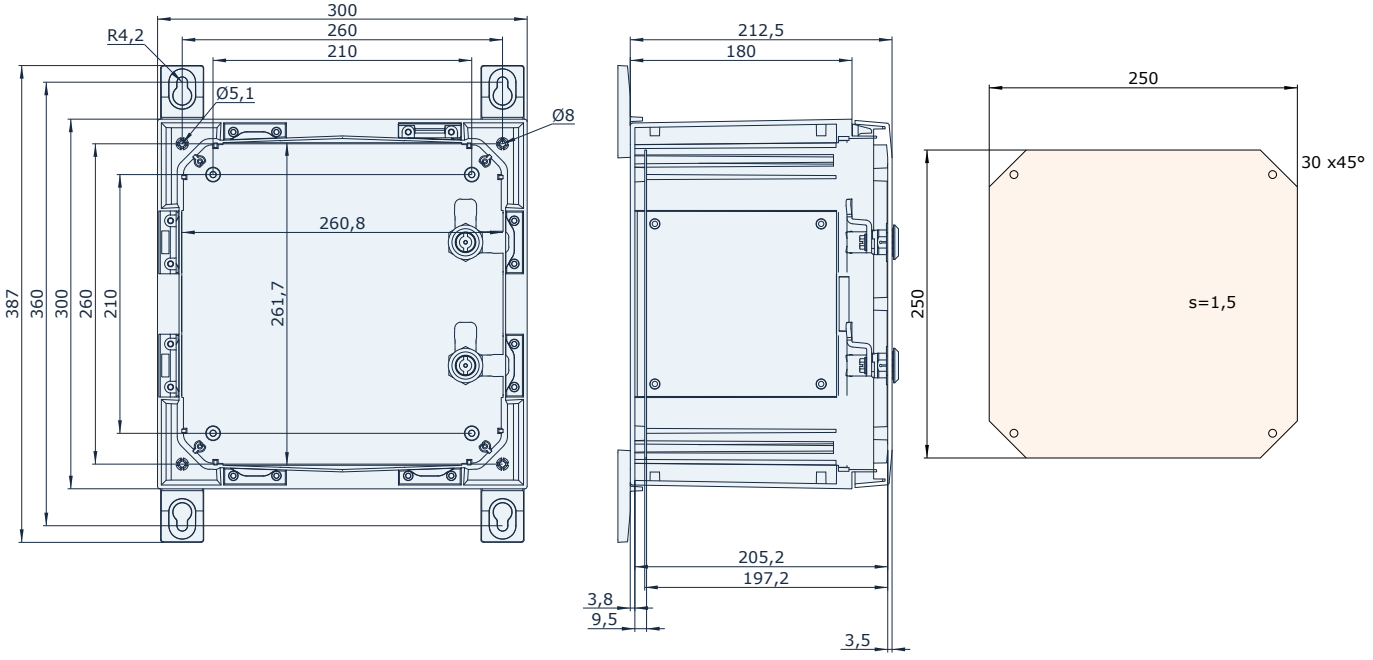

ARCA IEC

Accessories

	Description	Order Symbol	Code
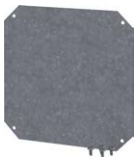	Mounting plate (250x250x2 mm) Galvanized steel, for sizes 300x300	MPS ARCA 3030	**8120732**
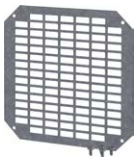	Mounting plate perforated (250x250x2 mm - 26x11 mm) Galvanized steel, for sizes 300x300	MPP ARCA 3030	**8120752**
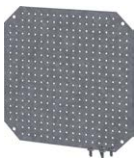	Mounting plate multiperforated (250x250x2 mm - ø3.6 mm) Galvanized steel, for size 300x300	MPMP ARCA 3030	**8120921**
	Mounting plate (250x250 mm) Isolated, for size 300x300	MPX ARCA 3030	**8120742**
	Inner door set Galvanized steel door frames, door from aluminium, RAL 7035, for sizes 300x300x210	IDS ARCA 3030	**8120712**
	DIN rail frame set 2 rows x 11 modules, for size 300x300x210	DRS ARCA 303021	**8120763**
	Rain canopy set for size 4030 and 3030	RCS ARCA 4030	**8120943**
	Plastic rain canopy set for size 300mm width	RCSQ ARCA 30	**8120971**
	PoleMounting kit, for pole ø100-300mm For sizes 200x300, 400x300	PMK ARCA 30	**8120841**
	Door stopper ARCA, vertical, left, small 2030-6040	DSP ARCA VLS	**8120960**
	Door stopper ARCA, vertical, right, small 2030-6040	DSP ARCA VRS	**8120961**
	Wall mounting lugs set for 2030-6040 Adds 10 mm between wall and cabinet	WMK ARCA 10 SMALL	**8120830**
	Wall mounting lugs set for 2030-6040 Adds 40 mm between wall and cabinet	WMK ARCA 40 SMALL	**8120831**
	Plastic Wall mounting lugs set for 2030-6040 Adds 10 mm between wall and cabinet	WMKQ10S	**8120832**
	Plastic Wall mounting lugs set for 2030-6040 Adds 50 mm between wall and cabinet	WMKQ50S	**8120833**
	Corner adjustment set For sizes with depth 210	CBS ARCA 21	**8120811**

ARCA IEC

HxWxD: 300 x 400 x 150 mm



ARCA 304015



ARCA 304015T

Description	Order Symbol	Code
Grey door, 2-point locking, hinges on the short side	ARCA 304015	**8120022**
Grey door, 2-point locking, hinges on the short side, without mountingplate	ARCA 304015 No MP	**8120022N**
Transparent door, 2-point locking, hinges on the short side, with mountingplate	ARCA 304015T	**8121022**
Transparent door, 2-point locking, hinges on the short side, without mountingplate	ARCA 304015T No MP	**8121022N**

NO MP = no mounting plate

Cabinet base, door with PUR gasket, mounting plate, screws for mounting plate. 3mm double bit lock(s) with key.
S versions with swinghandle 2-point locking system. Door guide included.

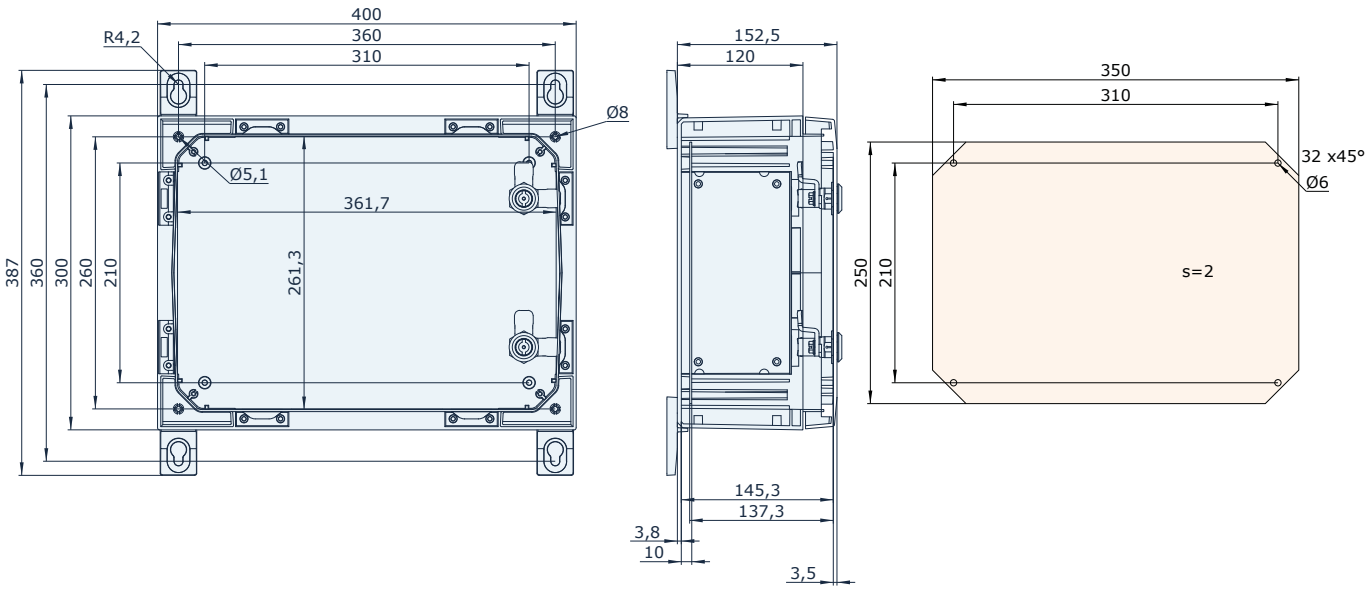

ARCA IEC

Accessories

	Description	Order Symbol	Code
	Mounting plate (350x250x2 mm) Galvanized steel, for sizes 300x400/400x300	MPS ARCA 4030	**8120733**
	Mounting plate perforated (350x250x2 mm - 26x11 mm) Galvanized steel, for sizes 300x400	MPP ARCA 3040	**8120931**
	Mounting plate multiperforated (350x250x2 mm - ø3.6 mm) Galvanized steel, for size 300x400/400x300	MPMP ARCA 4030	**8120922**
	Mounting plate (350x250 mm) Isolated, for sizes 300x400/400x300	MPX ARCA 4030	**8120743**
	Inner door set Galvanized steel door frames, door from aluminium, RAL 7035, for sizes 300x400x150/210	IDS ARCA 3040	**8120911**
	DIN rail frame set 1 row x 16 modules, for size 300x400x150	DRS ARCA 304015	**8120793**
	Rain canopy set for size 3040	RCS ARCA 3040	**8120942**
	Plastic rain canopy set for size 400mm width	RCSQ ARCA 40	**8120972**
	PoleMounting kit, for pole ø100-300mm For sizes 300x400, 500x400, 600x400	PMK ARCA 40	**8120842**
	Door stopper ARCA, horizontal, right, small 2030-6040	DSP ARCA HRS	**8120963**
	Door stopper ARCA, horizontal, left, small 2030-6040	DSP ARCA HLS	**8120962**
	Wall mounting lugs set for 2030-6040 Adds 10 mm between wall and cabinet	WMK ARCA 10 SMALL	**8120830**
	Wall mounting lugs set for 2030-6040 Adds 40 mm between wall and cabinet	WMK ARCA 40 SMALL	**8120831**
	Plastic Wall mounting lugs set for 2030-6040 Adds 10 mm between wall and cabinet	WMKQ10S	**8120832**
	Plastic Wall mounting lugs set for 2030-6040 Adds 50 mm between wall and cabinet	WMKQ50S	**8120833**
	Corner adjustment set For sizes with depth 150	CBS ARCA 15	**8120810**

ARCA IEC

HxWxD: 300 x 400 x 210 mm



ARCA 304021



ARCA 304021T

Description	Order Symbol	Code
Grey door, 2-point locking, hinges on the short side	ARCA 304021	**8120023**
Grey door, 2-point locking, hinges on the short side, without mountingplate	ARCA 304021 No MP	**8120023N**
Transparent door, 2-point locking, hinges on the short side, with mountingplate	ARCA 304021T	**8121023**
Transparent door, 2-point locking, hinges on the short side, without mountingplate	ARCA 304021T No MP	**8121023N**

NO MP = no mounting plate

Cabinet base, door with PUR gasket, mounting plate, screws for mounting plate. 3mm double bit lock(s) with key.
S versions with swinghandle 2-point locking system. Door guide included.

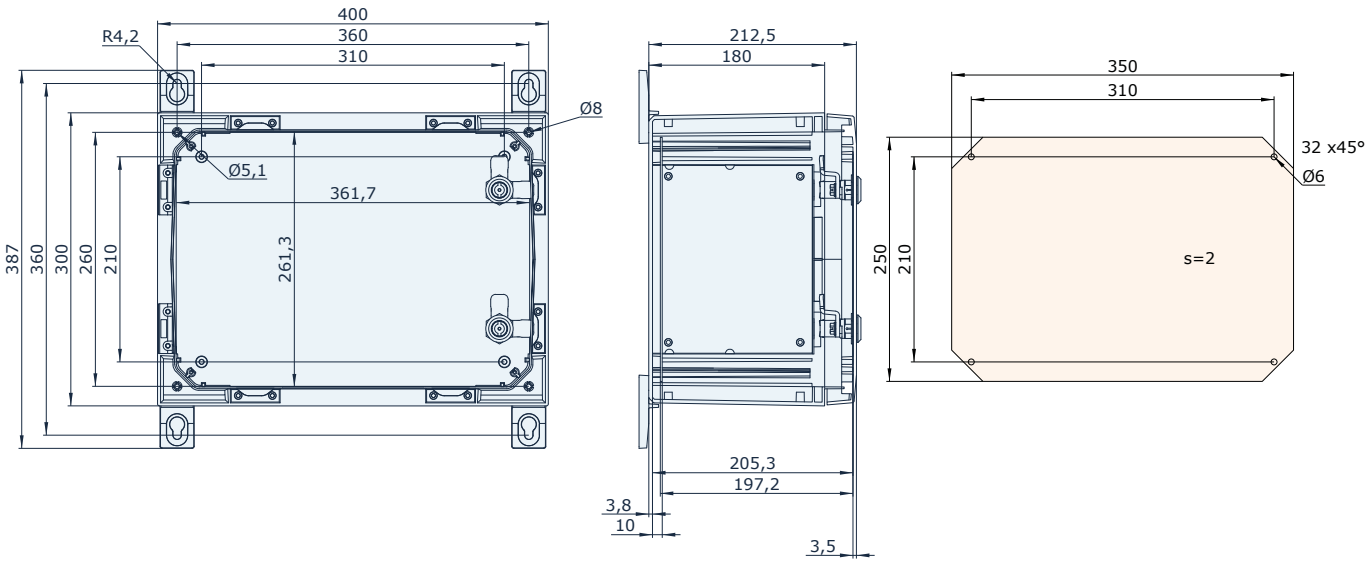

ARCA IEC

Accessories

	Description	Order Symbol	Code
	Mounting plate (350x250x2 mm) Galvanized steel, for sizes 300x400/400x300	MPS ARCA 4030	**8120733**
	Mounting plate perforated (350x250x2 mm - 26x11 mm) Galvanized steel, for sizes 300x400	MPP ARCA 3040	**8120931**
	Mounting plate multiperforated (350x250x2 mm - ø3.6 mm) Galvanized steel, for size 300x400/400x300	MPMP ARCA 4030	**8120922**
	Mounting plate (350x250 mm) Isolated, for sizes 300x400/400x300	MPX ARCA 4030	**8120743**
	Inner door set Galvanized steel door frames, door from aluminium, RAL 7035, for sizes 300x400x150/210	IDS ARCA 3040	**8120911**
	DIN rail frame set 1 row x 16 modules, for size 300x400x210	DRS ARCA 304021	**8120794**
	Rain canopy set for size 3040	RCS ARCA 3040	**8120942**
	Plastic rain canopy set for size 400mm width	RCSQ ARCA 40	**8120972**
	PoleMounting kit, for pole ø100-300mm For sizes 300x400, 500x400, 600x400	PMK ARCA 40	**8120842**
	Door stopper ARCA, horizontal, right, small 2030-6040	DSP ARCA HRS	**8120963**
	Door stopper ARCA, horizontal, left, small 2030-6040	DSP ARCA HLS	**8120962**
	Wall mounting lugs set for 2030-6040 Adds 10 mm between wall and cabinet	WMK ARCA 10 SMALL	**8120830**
	Wall mounting lugs set for 2030-6040 Adds 40 mm between wall and cabinet	WMK ARCA 40 SMALL	**8120831**
	Plastic Wall mounting lugs set for 2030-6040 Adds 10 mm between wall and cabinet	WMKQ10S	**8120832**
	Plastic Wall mounting lugs set for 2030-6040 Adds 50 mm between wall and cabinet	WMKQ50S	**8120833**
	Corner adjustment set For sizes with depth 210	CBS ARCA 21	**8120811**

ARCA IEC

HxWxD: 400 x 300 x 150 mm



ARCA 403015



ARCA 403015S



ARCA 403015ST



ARCA 403015T

Description	Order Symbol	Code
Grey door, 2-point locking, hinges on the long side	ARCA 403015	**8120006**
Grey door, 2-point locking, hinges on the long side, without mountingplate	ARCA 403015 No MP	**8120006N**
Grey door, Swinghandle, hinges on the long side	ARCA 403015S	**8120086**
Grey door, Swinghandle, hinges on the long side, without mountingplate	ARCA 403015S No MP	**8120086N**
Transparent door, 2-point locking, hinges on the long side, with mountingplate	ARCA 403015T	**8121006**
Transparent door, 2-point locking, hinges on the long side, without mountingplate	ARCA 403015T No MP	**8121006N**
Transparent door, Swinghandle, hinges on the long side, with mountingplate	ARCA 403015ST	**8121086**
Transparent door, Swinghandle, hinges on the long side, without mountingplate	ARCA 403015ST No MP	**8121086N**

NO MP = no mounting plate

Cabinet base, door with PUR gasket, mounting plate, screws for mounting plate. 3mm double bit lock(s) with key.
S versions with swinghandle 2-point locking system. Door guide included.

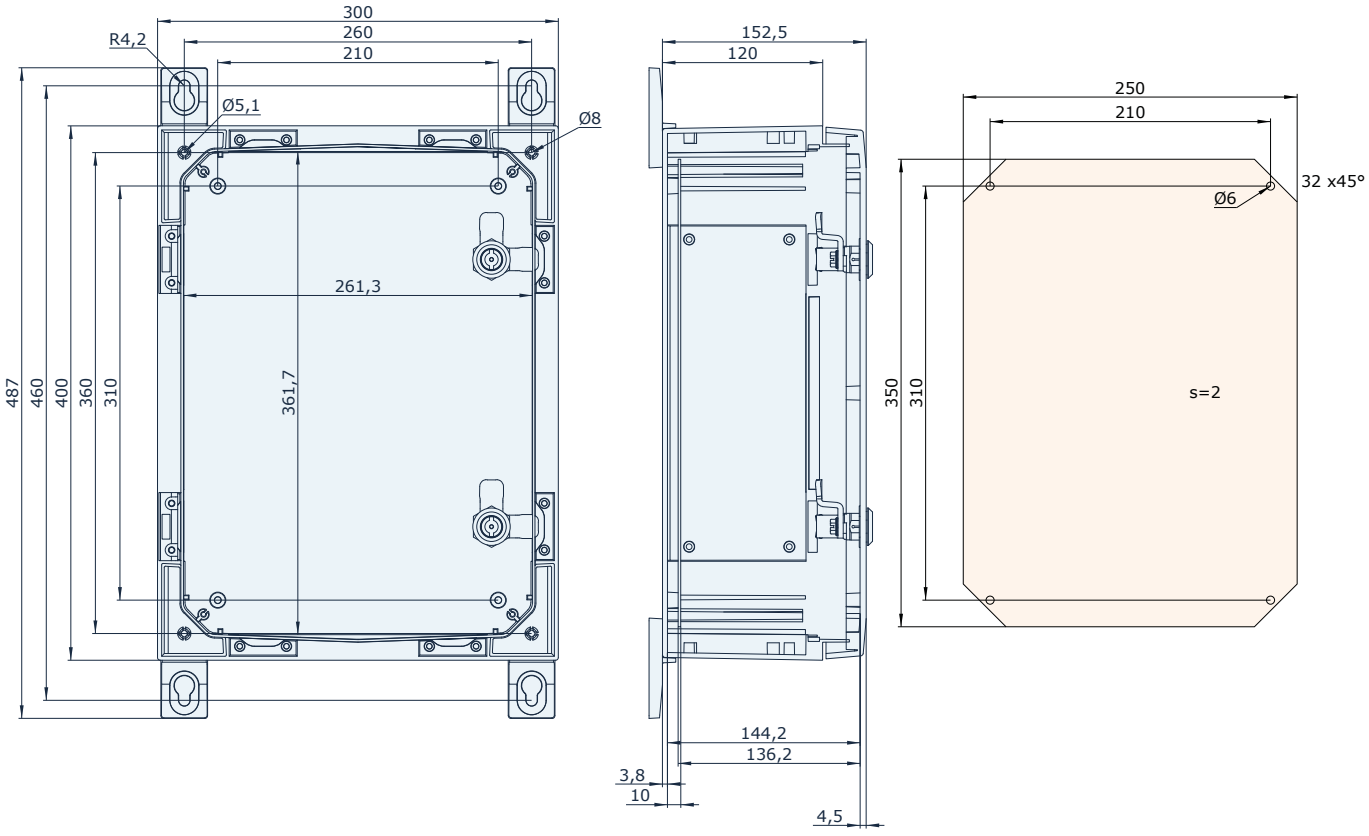

ARCA IEC

Accessories

	Description	Order Symbol	Code
	Mounting plate (350x250x2 mm) Galvanized steel, for sizes 300x400/400x300	MPS ARCA 4030	**8120733**
	Mounting plate perforated (350x250x2 mm - 26x11 mm) Galvanized steel, for sizes 400x300	MPP ARCA 4030	**8120753**
	Mounting plate multiperforated (350x250x2 mm - ø3.6 mm) Galvanized steel, for size 300x400/400x300	MPMP ARCA 4030	**8120922**
	Mounting plate (350x250 mm) Isolated, for sizes 300x400/400x300	MPX ARCA 4030	**8120743**
	Inner door set Galvanized steel door frames, door from aluminium, RAL 7035, for sizes 400x300x150/210	IDS ARCA 4030	**8120713**
	DIN rail frame set 2 rows x 11 modules, for size 400x300x150	DRS ARCA 403015	**8120764**
	Rain canopy set for size 4030 and 3030	RCS ARCA 4030	**8120943**
	Plastic rain canopy set for size 300mm width	RCSQ ARCA 30	**8120971**
	PoleMounting kit, for pole ø100-300mm For sizes 200x300, 400x300	PMK ARCA 30	**8120841**
	Door stopper ARCA, vertical, left, small 2030-6040	DSP ARCA VLS	**8120960**
	Door stopper ARCA, vertical, right, small 2030-6040	DSP ARCA VRS	**8120961**
	Wall mounting lugs set for 2030-6040 Adds 10 mm between wall and cabinet	WMK ARCA 10 SMALL	**8120830**
	Wall mounting lugs set for 2030-6040 Adds 40 mm between wall and cabinet	WMK ARCA 40 SMALL	**8120831**
	Plastic Wall mounting lugs set for 2030-6040 Adds 10 mm between wall and cabinet	WMKQ10S	**8120832**
	Plastic Wall mounting lugs set for 2030-6040 Adds 50 mm between wall and cabinet	WMKQ50S	**8120833**
	Corner adjustment set For sizes with depth 150	CBS ARCA 15	**8120810**

ARCA IEC

HxWxD: 400 x 300 x 210 mm



ARCA 403021



ARCA 403021S



ARCA 403021ST



ARCA 403021T

Description	Order Symbol	Code
Grey door, 2-point locking, hinges on the long side	ARCA 403021	**8120007**
Grey door, 2-point locking, hinges on the long side, without mountingplate	ARCA 403021 No MP	**8120007N**
Grey door, Swinghandle, hinges on the long side	ARCA 403021S	**8120087**
Grey door, Swinghandle, hinges on the long side, without mountingplate	ARCA 403021S No MP	**8120087N**
Transparent door, 2-point locking, hinges on the long side, with mountingplate	ARCA 403021T	**8121007**
Transparent door, 2-point locking, hinges on the long side, without mountingplate	ARCA 403021T No MP	**8121007N**
Transparent door, Swinghandle, hinges on the long side, with mountingplate	ARCA 403021ST	**8121087**
Transparent door, Swinghandle, hinges on the long side, without mountingplate	ARCA 403021ST No MP	**8121087N**

NO MP = no mounting plate

Cabinet base, door with PUR gasket, mounting plate, screws for mounting plate. 3mm double bit lock(s) with key.
S versions with swinghandle 2-point locking system. Door guide included.

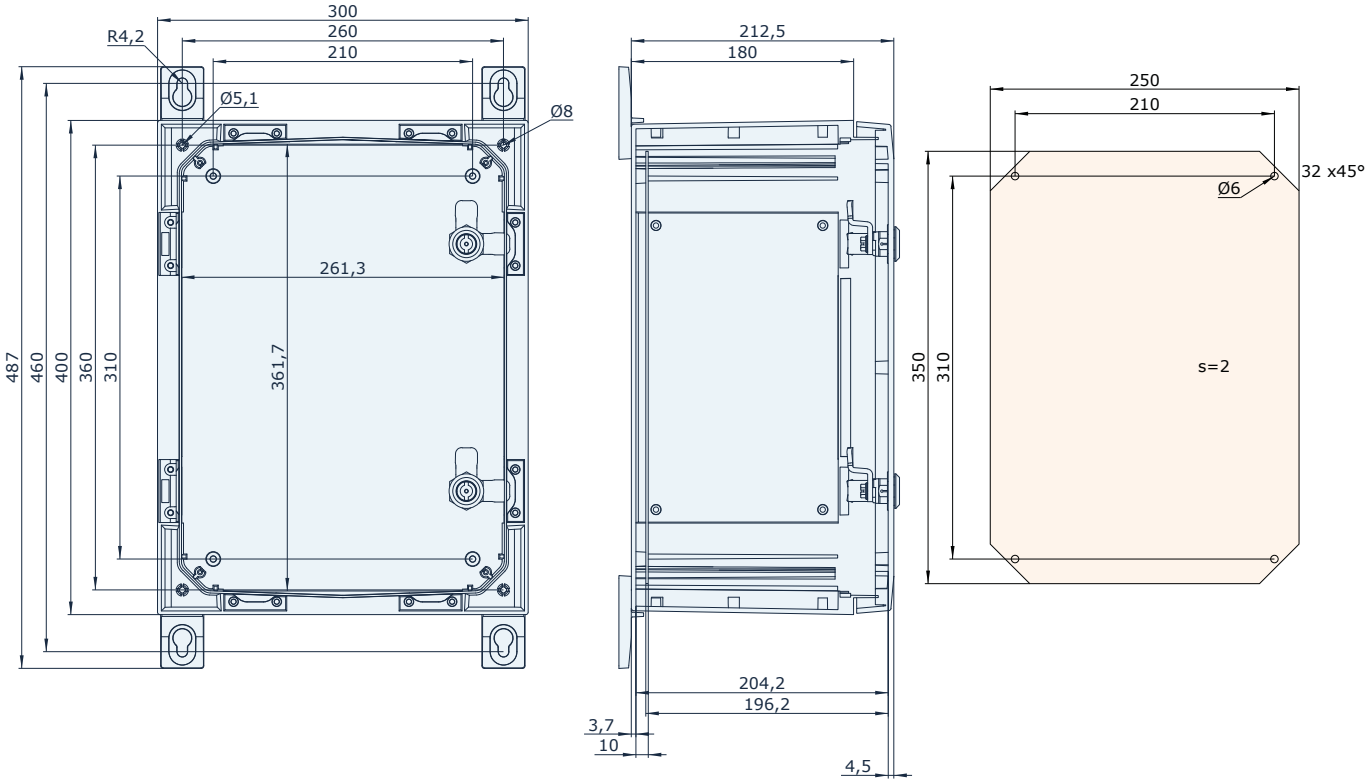

ARCA IEC

Accessories

	Description	Order Symbol	Code
	Mounting plate (350x250x2 mm) Galvanized steel, for sizes 300x400/400x300	MPS ARCA 4030	**8120733**
	Mounting plate perforated (350x250x2 mm - 26x11 mm) Galvanized steel, for sizes 400x300	MPP ARCA 4030	**8120753**
	Mounting plate multiperforated (350x250x2 mm - ø3.6 mm) Galvanized steel, for size 300x400/400x300	MPMP ARCA 4030	**8120922**
	Mounting plate (350x250 mm) Isolated, for sizes 300x400/400x300	MPX ARCA 4030	**8120743**
	Inner door set Galvanized steel door frames, door from aluminium, RAL 7035, for sizes 400x300x150/210	IDS ARCA 4030	**8120713**
	DIN rail frame set 2 rows x 11 modules, for size 400x300x210	DRS ARCA 403021	**8120765**
	Rain canopy set for size 4030 and 3030	RCS ARCA 4030	**8120943**
	Plastic rain canopy set for size 300mm width	RCSQ ARCA 30	**8120971**
	PoleMounting kit, for pole ø100-300mm For sizes 200x300, 400x300	PMK ARCA 30	**8120841**
	Door stopper ARCA, vertical, left, small 2030-6040	DSP ARCA VLS	**8120960**
	Door stopper ARCA, vertical, right, small 2030-6040	DSP ARCA VRS	**8120961**
	Wall mounting lugs set for 2030-6040 Adds 10 mm between wall and cabinet	WMK ARCA 10 SMALL	**8120830**
	Wall mounting lugs set for 2030-6040 Adds 40 mm between wall and cabinet	WMK ARCA 40 SMALL	**8120831**
	Plastic Wall mounting lugs set for 2030-6040 Adds 10 mm between wall and cabinet	WMKQ10S	**8120832**
	Plastic Wall mounting lugs set for 2030-6040 Adds 50 mm between wall and cabinet	WMKQ50S	**8120833**
	Corner adjustment set For sizes with depth 210	CBS ARCA 21	**8120811**

ARCA IEC

HxWxD: 400 x 400 x 210 mm



ARCA 404021



ARCA 404021S



ARCA 404021ST



ARCA 404021T

Description	Order Symbol	Code
Grey door, 2-point locking	ARCA 404021	**8120009**
Grey door, 2-point locking, without mountingplate	ARCA 404021 No MP	**8120009N**
Grey door, Swinghandle	ARCA 404021S	**8120089**
Grey door, Swinghandle, without mountingplate	ARCA 404021S No MP	**8120089N**
Transparent door, 2-point locking, with mountingplate	ARCA 404021T	**8121009**
Transparent door, 2-point locking, without mountingplate	ARCA 404021T No MP	**8121009N**
Transparent door, Swinghandle, with mountingplate	ARCA 404021ST	**8121089**
Transparent door, Swinghandle, without mountingplate	ARCA 404021ST No MP	**8121089N**

NO MP = no mounting plate

Cabinet base, door with PUR gasket, mounting plate, screws for mounting plate. 3mm double bit lock(s) with key.
S versions with swinghandle 2-point locking system. Door guide included.

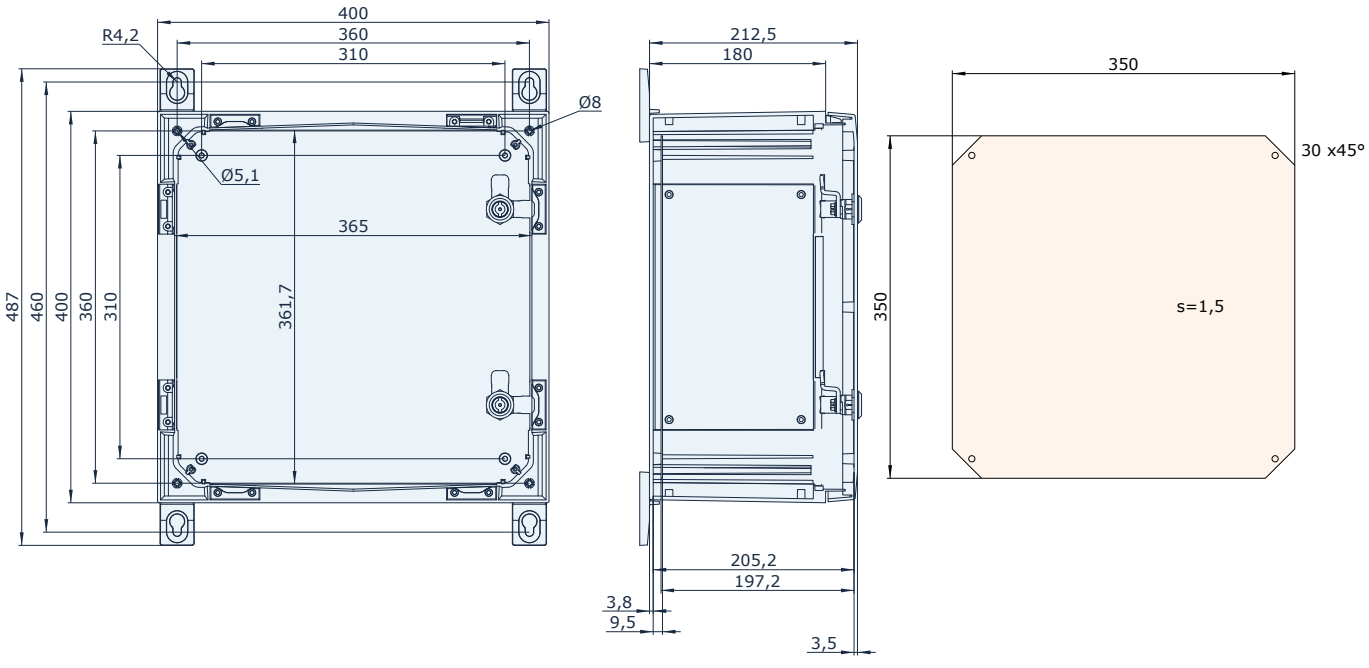

ARCA IEC

Accessories

	Description	Order Symbol	Code
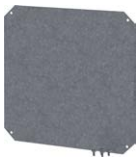	Mounting plate (350x250x2 mm) Galvanized steel, for sizes 400x400	MPS ARCA 4040	**8120734**
	Mounting plate perforated (350x350x2 mm - 26x11 mm) Galvanized steel, for size 400x400	MPP ARCA 4040	**8120754**
	Mounting plate multiperforated (350x350x2 mm - ø3.6 mm) Galvanized steel, for size 400x400	MPMP ARCA 4040	**8120923**
	Mounting plate (350x350 mm) Isolated, for sizes 400x400	MPX ARCA 4040	**8120744**
	Inner door set Galvanized steel door frames, door from aluminium, RAL 7035, for sizes 400x400x210	IDS ARCA 4040	**8120714**
	DIN rail frame set 2 rows x 17 modules, for size 400x400x210	DRS ARCA 404021	**8120767**
	Rain canopy set for size 5040 and 4040	RCS ARCA 5040	**8120946**
	Plastic rain canopy set for size 400mm width	RCSQ ARCA 40	**8120972**
	PoleMounting kit, for pole ø100-300mm For sizes 300x400, 500x400, 600x400	PMK ARCA 40	**8120842**
	Door stopper ARCA, vertical, left, small 2030-6040	DSP ARCA VLS	**8120960**
	Door stopper ARCA, vertical, right, small 2030-6040	DSP ARCA VRS	**8120961**
	Wall mounting lugs set for 2030-6040 Adds 10 mm between wall and cabinet	WMK ARCA 10 SMALL	**8120830**
	Wall mounting lugs set for 2030-6040 Adds 40 mm between wall and cabinet	WMK ARCA 40 SMALL	**8120831**
	Plastic Wall mounting lugs set for 2030-6040 Adds 10 mm between wall and cabinet	WMKQ10S	**8120832**
	Plastic Wall mounting lugs set for 2030-6040 Adds 50 mm between wall and cabinet	WMKQ50S	**8120833**
	Corner adjustment set For sizes with depth 210	CBS ARCA 21	**8120811**

ARCA IEC

HxWxD: 400 x 500 x 210 mm



ARCA 405021



ARCA 405021S



ARCA 405021ST



ARCA 405021T

Description	Order Symbol	Code
Grey door, 2-point locking, hinges on the short side	ARCA 405021	**8120025**
Grey door, 2-point locking, hinges on the short side, without mountingplate	ARCA 405021 No MP	**8120025N**
Grey door, Swinghandle, hinges on the short side	ARCA 405021S	**8120105**
Grey door, Swinghandle, hinges on the short side, without mountingplate	ARCA 405021S No MP	**8120105N**
Transparent door, 2-point locking, hinges on the short side, with mountingplate	ARCA 405021T	**8121025**
Transparent door, 2-point locking, hinges on the short side, without mountingplate	ARCA 405021T No MP	**8121025N**
Transparent door, Swinghandle, hinges on the short side, with mountingplate	ARCA 405021ST	**8121105**
Transparent door, Swinghandle, hinges on the short side, without mountingplate	ARCA 405021ST No MP	**8121105N**

NO MP = no mounting plate

Cabinet base, door with PUR gasket, mounting plate, screws for mounting plate. 3mm double bit lock(s) with key.
S versions with swinghandle 2-point locking system. Door guide included.

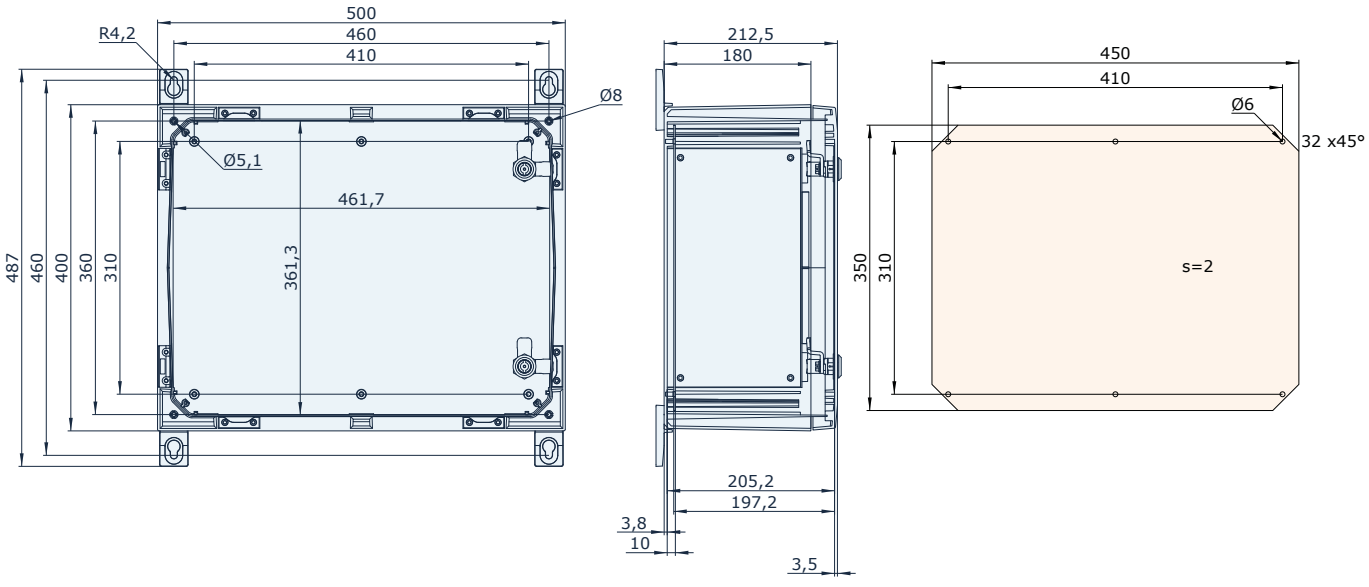

ARCA IEC

Accessories

	Description	Order Symbol	Code
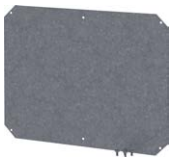	Mounting plate (450x350x2 mm) Galvanized steel, for sizes 400x500/500x400	MPS ARCA 5040	**8120735**
	Mounting plate perforated (450x350x2 mm - 26x11 mm) Galvanized steel, for size 400x500	MPP ARCA 4050	**8120932**
	Mounting plate multiperforated (450x350x2 mm - ø3.6 mm) Galvanized steel, for size 400x500/500x400	MPMP ARCA 5040	**8120924**
	Mounting plate (450x350 mm) Isolated, for size 400x500/500x400	MPX ARCA 5040	**8120745**
	Inner door set Galvanized steel door frames, door from aluminium, RAL 7035, for size 400x500x210	IDS ARCA 4050	**8120912**
	DIN rail frame set 2 rows x 22 modules, for size 400x500x210	DRS ARCA 405021	**8120796**
	Rain canopy set for size 4050	RCS ARCA 4050	**8120944**
	Plastic rain canopy set for size 500mm width	RCSQ ARCA 50	**8120973**
	PoleMounting kit, for pole ø100-300mm For sizes 400x500, 700x500	PMK ARCA 50	**8120843**
	Door stopper ARCA, horizontal, right, small 2030-6040	DSP ARCA HRS	**8120963**
	Door stopper ARCA, horizontal, left, small 2030-6040	DSP ARCA HLS	**8120962**
	Wall mounting lugs set for 2030-6040 Adds 10 mm between wall and cabinet	WMK ARCA 10 SMALL	**8120830**
	Wall mounting lugs set for 2030-6040 Adds 40 mm between wall and cabinet	WMK ARCA 40 SMALL	**8120831**
	Plastic Wall mounting lugs set for 2030-6040 Adds 10 mm between wall and cabinet	WMKQ10S	**8120832**
	Plastic Wall mounting lugs set for 2030-6040 Adds 50 mm between wall and cabinet	WMKQ50S	**8120833**
	Corner adjustment set For sizes with depth 210	CBS ARCA 21	**8120811**

ARCA IEC

HxWxD: 400 x 600 x 210 mm



ARCA 406021



ARCA 406021S



ARCA 406021ST



ARCA 406021T

Description	Order Symbol	Code
Grey door, 2-point locking, hinges on the short side	ARCA 406021	**8120026**
Grey door, 2-point locking, hinges on the short side, without mountingplate	ARCA 406021 No MP	**8120026N**
Grey door, Swinghandle, hinges on the short side	ARCA 406021S	**8120106**
Grey door, Swinghandle, hinges on the short side, without mountingplate	ARCA 406021S No MP	**8120106N**
Transparent door, 2-point locking, hinges on the short side, with mountingplate	ARCA 406021T	**8121026**
Transparent door, 2-point locking, hinges on the short side, without mountingplate	ARCA 406021T No MP	**8121026N**
Transparent door, Swinghandle, hinges on the short side, with mountingplate	ARCA 406021ST	**8121106**
Transparent door, Swinghandle, hinges on the short side, without mountingplate	ARCA 406021ST No MP	**8121106N**

NO MP = no mounting plate

Cabinet base, door with PUR gasket, mounting plate, screws for mounting plate. 3mm double bit lock(s) with key.
S versions with swinghandle 2-point locking system. Door guide included.

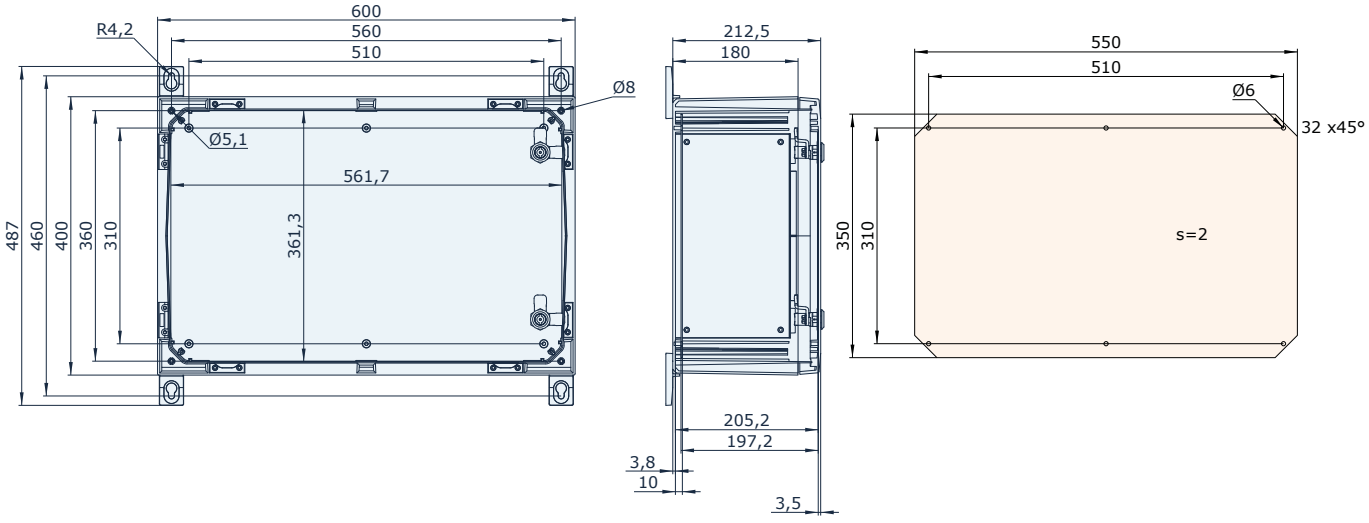

ARCA IEC

Accessories

	Description	Order Symbol	Code
	Mounting plate (550x350x2 mm) Galvanized steel, for size 400x600/600x400	MPS ARCA 6040	**8120736**
	Mounting plate perforated (550x350x2 mm - 26x11 mm) Galvanized steel, for size 400x600	MPP ARCA 4060	**8120933**
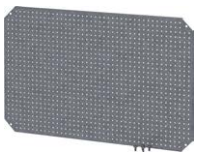	Mounting plate multiperforated (550x350x2 mm - ø3.6 mm) Galvanized steel, for size 400x600/600x400	MPMP ARCA 6040	**8120925**
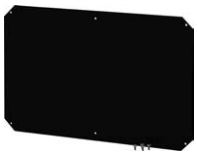	Mounting plate (550x350 mm) Isolated, for size 400x600/600x400	MPX ARCA 6040	**8120746**
	Inner door set Galvanized steel door frames, door from aluminium, RAL 7035, for size 400x600x210	IDS ARCA 4060	**8120913**
	DIN rail frame set 2 rows x 27 modules, for size 400x600x210	DRS ARCA 406021	**8120797**
	Rain canopy set for size 4060	RCS ARCA 4060	**8120945**
	PoleMounting kit, for pole ø100-300mm For sizes 400x600, 800x600	PMK ARCA 60	**8120844**
	Door stopper ARCA, horizontal, right, small 2030-6040	DSP ARCA HRS	**8120963**
	Door stopper ARCA, horizontal, left, small 2030-6040	DSP ARCA HLS	**8120962**
	Wall mounting lugs set for 2030-6040 Adds 10 mm between wall and cabinet	WMK ARCA 10 SMALL	**8120830**
	Wall mounting lugs set for 2030-6040 Adds 40 mm between wall and cabinet	WMK ARCA 40 SMALL	**8120831**
	Plastic Wall mounting lugs set for 2030-6040 Adds 10 mm between wall and cabinet	WMKQ10S	**8120832**
	Plastic Wall mounting lugs set for 2030-6040 Adds 50 mm between wall and cabinet	WMKQ50S	**8120833**
	Corner adjustment set For sizes with depth 210	CBS ARCA 21	**8120811**
	Plastic rain canopy set for size 600mm width	RCSQ ARCA 60	**8120974**

ARCA IEC

HxWxD: 500 x 400 x 210 mm



ARCA 504021



ARCA 504021S



ARCA 504021ST



ARCA 504021T

Description	Order Symbol	Code
Grey door, 2-point locking, hinges on the long side	ARCA 504021	**8120011**
Grey door, 2-point locking, hinges on the long side, without mountingplate	ARCA 504021 No MP	**8120011N**
Grey door, Swinghandle, hinges on the long side	ARCA 504021S	**8120091**
Grey door, Swinghandle, hinges on the long side, without mountingplate	ARCA 504021S No MP	**8120091N**
Transparent door, 2-point locking, hinges on the long side, with mountingplate	ARCA 504021T	**8121011**
Transparent door, 2-point locking, hinges on the long side, without mountingplate	ARCA 504021T No MP	**8121011N**
Transparent door, Swinghandle, hinges on the long side, with mountingplate	ARCA 504021ST	**8121091**
Transparent door, Swinghandle, hinges on the long side, without mountingplate	ARCA 504021ST No MP	**8121091N**

NO MP = no mounting plate

Cabinet base, door with PUR gasket, mounting plate, screws for mounting plate. 3mm double bit lock(s) with key.
S versions with swinghandle 2-point locking system. Door guide included.

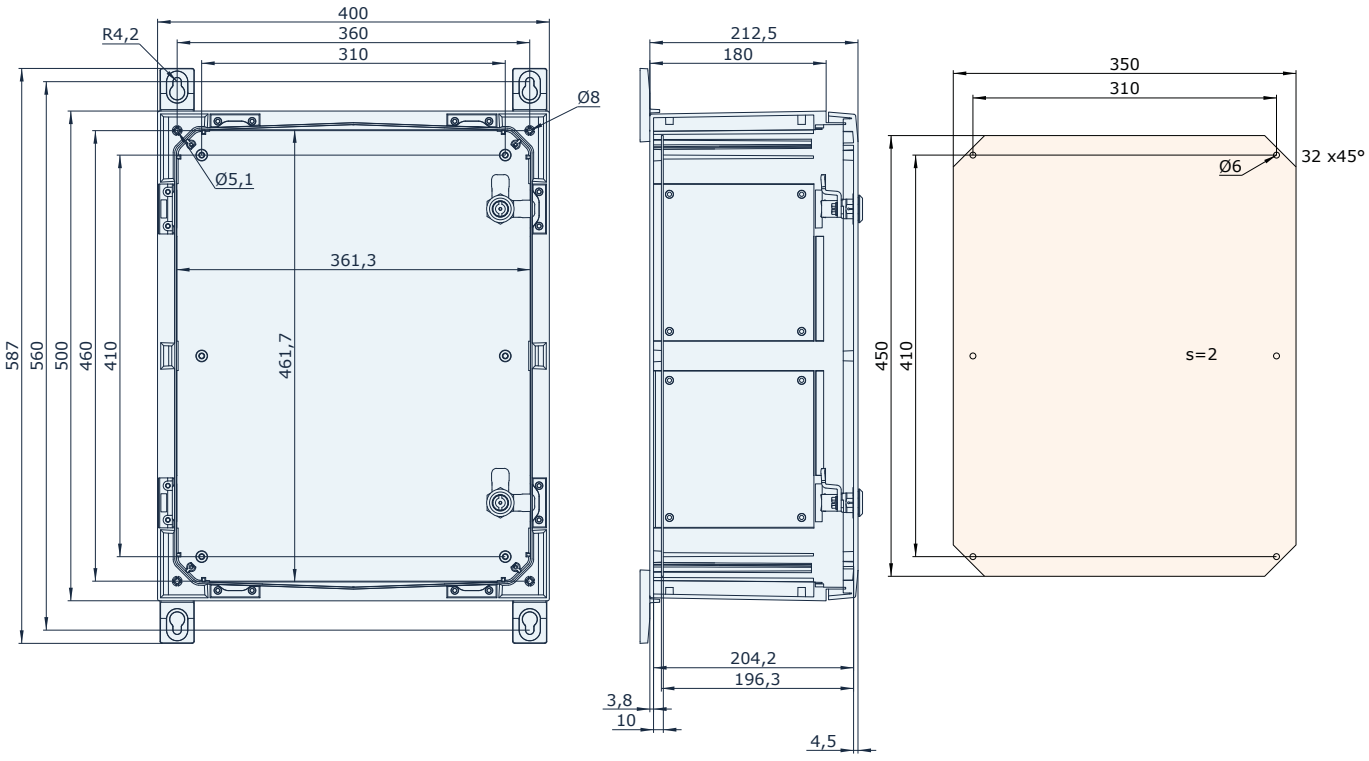

ARCA IEC

Accessories

	Description	Order Symbol	Code
	Mounting plate (450x350x2 mm) Galvanized steel, for sizes 400x500/500x400	MPS ARCA 5040	**8120735**
	Mounting plate perforated (450x350x2 mm - 26x11 mm) Galvanized steel, for size 500x400	MPP ARCA 5040	**8120755**
	Mounting plate multiperforated (450x350x2 mm - ø3.6 mm) Galvanized steel, for size 400x500/500x400	MPMP ARCA 5040	**8120924**
	Mounting plate (450x350 mm) Isolated, for size 400x500/500x400	MPX ARCA 5040	**8120745**
	Inner door set Galvanized steel doorframes, door from aluminium, RAL 7035, for size 500x400x210	IDS ARCA 5040	**8120715**
	DIN rail frame set 3 rows x 16 modules, for size 500x400x210	DRS ARCA 504021	**8120769**
	Rain canopy set for size 5040 and 4040	RCS ARCA 5040	**8120946**
	PoleMounting kit, for pole ø100-300mm For sizes 300x400, 500x400, 600x400	PMK ARCA 40	**8120842**
	Door stopper ARCA, vertical, left, small 2030-6040	DSP ARCA VLS	**8120960**
	Door stopper ARCA, vertical, right, small 2030-6040	DSP ARCA VRS	**8120961**
	Wall mounting lugs set for 2030-6040 Adds 10 mm between wall and cabinet	WMK ARCA 10 SMALL	**8120830**
	Wall mounting lugs set for 2030-6040 Adds 40 mm between wall and cabinet	WMK ARCA 40 SMALL	**8120831**
	Plastic Wall mounting lugs set for 2030-6040 Adds 10 mm between wall and cabinet	WMKQ10S	**8120832**
	Plastic Wall mounting lugs set for 2030-6040 Adds 50 mm between wall and cabinet	WMKQ50S	**8120833**
	Corner adjustment set For sizes with depth 210	CBS ARCA 21	**8120811**

ARCA IEC

HxWxD: 500 x 500 x 210 mm



ARCA 505021



ARCA 505021S



ARCA 505021ST



ARCA 505021T

Description	Order Symbol	Code
Grey door, 2-point locking	ARCA 505021	**8120032**
Grey door, 2-point locking, without mountingplate	ARCA 505021 No MP	**8120032N**
Grey door, Swinghandle	ARCA 505021S	**8120112**
Grey door, Swinghandle, without mountingplate	ARCA 505021S No MP	**8120112N**
Transparent door, 2-point locking, with mountingplate	ARCA 505021T	**8121032**
Transparent door, 2-point locking, without mountingplate	ARCA 505021T No MP	**8121032N**
Transparent door, Swinghandle, with mountingplate	ARCA 505021ST	**8121112**
Transparent door, Swinghandle, without mountingplate	ARCA 505021ST No MP	**8121112N**

NO MP = no mounting plate

Cabinet base, door with PUR gasket, mounting plate, screws for mounting plate. 3mm double bit lock(s) with key.
S versions with swinghandle 2-point locking system. Door guide included.

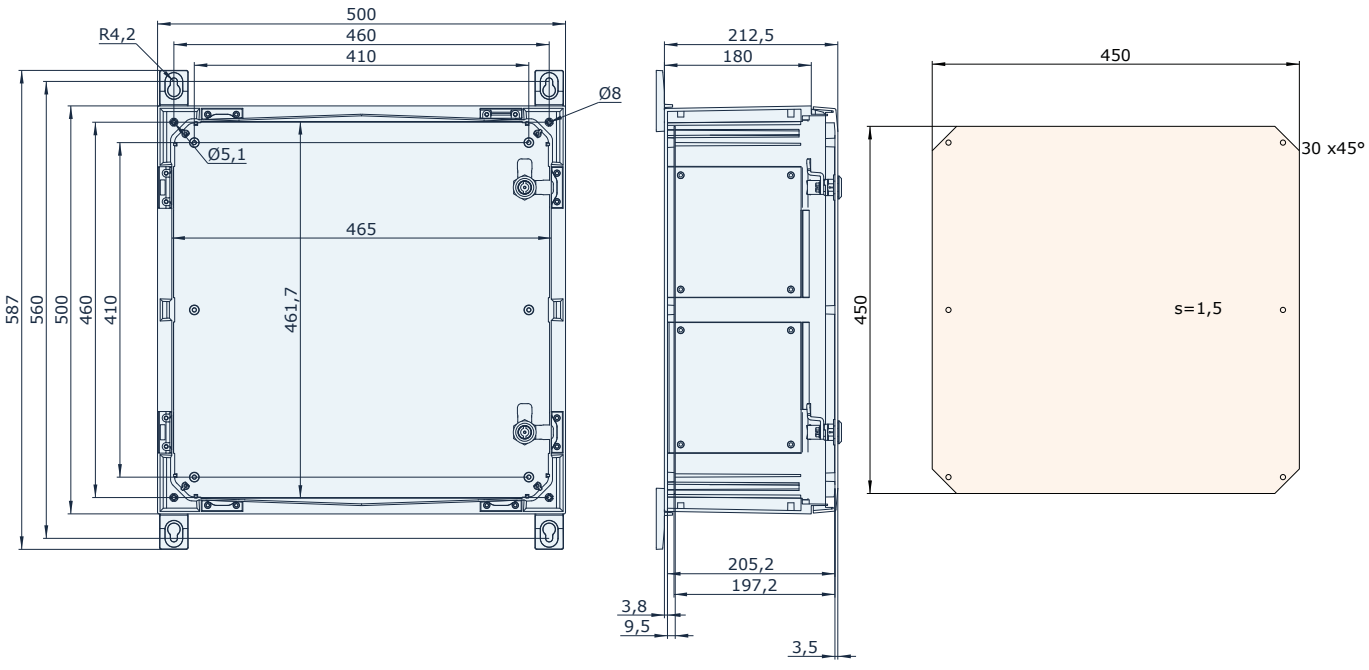

ARCA IEC

Accessories

	Description	Order Symbol	Code
	Mounting plate (450x450x2 mm) Galvanized steel, for sizes 500x500	MPS ARCA 5050	**8120730**
	Mounting plate perforated (450x450x2 mm - 26x11 mm) Galvanized steel, for size 500x500	MPP ARCA 5050	**8120750**
	Mounting plate multiperforated (450x450x2 mm - ø3.6 mm) Galvanized steel, for size 500x500	MPMP ARCA 5050	**8120929**
	Mounting plate (450x450 mm) Isolated, for size 500x500	MPX ARCA 5050	**8120740**
	Inner door set Galvanized steel door frames, door from aluminium, RAL 7035, for sizes 500x500x210	IDS ARCA 5050	**8120710**
	DIN rail frame set 3 rows x 22 modules, for size 500x500x210	DRS ARCA 505021	**8120778**
	Rain canopy set for size 5050	RCS ARCA 5050	**8120954**
	Plastic rain canopy set for size 500mm width	RCSQ ARCA 50	**8120973**
	PoleMounting kit, for pole ø100-300mm For sizes 400x500, 700x500	PMK ARCA 50	**8120843**
	Door stopper ARCA, vertical, left, small 2030-6040	DSP ARCA VLS	**8120960**
	Door stopper ARCA, vertical, right, small 2030-6040	DSP ARCA VRS	**8120961**
	Wall mounting lugs set for 2030-6040 Adds 10 mm between wall and cabinet	WMK ARCA 10 SMALL	**8120830**
	Wall mounting lugs set for 2030-6040 Adds 40 mm between wall and cabinet	WMK ARCA 40 SMALL	**8120831**
	Plastic Wall mounting lugs set for 2030-6040 Adds 10 mm between wall and cabinet	WMKQ10S	**8120832**
	Plastic Wall mounting lugs set for 2030-6040 Adds 50 mm between wall and cabinet	WMKQ50S	**8120833**
	Corner adjustment set For sizes with depth 210	CBS ARCA 21	**8120811**

ARCA IEC

HxWxD: 500 x 700 x 300 mm



ARCA 507030



ARCA 507030S



ARCA 507030W

Description	Order Symbol	Code
Grey door, 2-point locking, hinges on the short side	ARCA 507030	**8120031**
Grey door, 2-point locking, hinges on the short side, without mountingplate	ARCA 507030 No MP	**8120031N**
Grey door, Swinghandle, hinges on the short side	ARCA 507030S	**8120111**
Grey door, Swinghandle, hinges on the short side, without mountingplate	ARCA 507030S No MP	**8120111N**
Grey door with window, 2-point locking, hinges on the short side	ARCA 507030W	**8120151**
Grey door with window, 2-point locking, hinges on the short side, without mountingplate	ARCA 507030W No MP	**8120151N**

NO MP = no mounting plate

Cabinet base, door with PUR gasket, mounting plate, screws for mounting plate. 3mm double bit lock(s) with key.
S versions with swinghandle 2-point locking system. Door guide included.

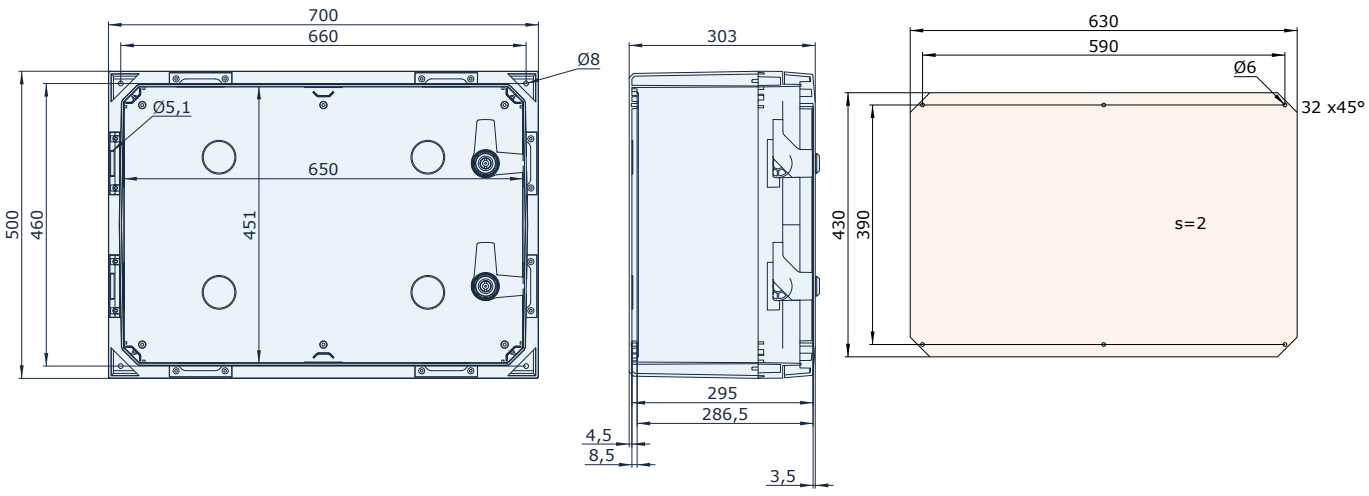

ARCA IEC

Accessories

	Description	Order Symbol	Code
	Mounting plate (630x430x2 mm) Galvanized steel, for size 500X700/700x500	MPS ARCA 7050	**8120738**
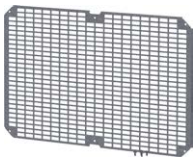	Mounting plate perforated (630x430x2 mm - 26x11 mm) Galvanized steel, for size 500x700	MPP ARCA 5070	**8120934**
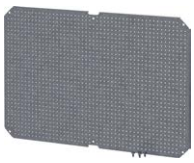	Mounting plate multiperforated (630x430x2 mm - ø3.6 mm) Galvanized steel, for size 500x700/700x500	MPMP ARCA 7050	**8120927**
	Mounting plate (630x430 mm) Isolated, for size 500x700/700x500	MPX ARCA 7050	**8120748**
	Inner door set Galvanized steel door frames, door from aluminium, RAL 7035, for size 500x700x300	IDS ARCA 5070	**8120914**
	DIN rail frame set 3 rows x 32 modules, for size 500x700x300	DRS ARCA 507030	**8120790**
	Rain canopy set for size 5070	RCS ARCA 5070	**8120947**
	Plastic rain canopy set for size 700mm width	RCSQ ARCA 70	**8120975**
	PoleMounting kit, for pole ø100-300mm For size 500x700	PMK ARCA 70	**8120845**
	Door stopper ARCA, right, midsize 5070-8060	DSP ARCA RM	**8120965**
	Door stopper ARCA, left, midsize 5070-8060	DSP ARCA LM	**8120964**
	Wall mounting lugs set for 5070-8060 Adds 10 mm between wall and cabinet	WMK ARCA 10 MID	**8120904**
	Wall mounting lugs set for 5070-8060 Adds 40 mm between wall and cabinet	WMK ARCA 40 MID	**8120905**
	Plastic Wall mounting lugs set for 5070-8060 Adds 10 mm between wall and cabinet	WMKQ10M	**8120834**
	Plastic Wall mounting lugs set for 5070-8060 Adds 50 mm between wall and cabinet	WMKQ50M	**8120835**
	Corner adjustment set For sizes with depth 300	CBS ARCA 30	**8120812**

ARCA IEC

HxWxD: 600 x 400 x 210 mm



ARCA 604021



ARCA 604021S



ARCA 604021ST



ARCA 604021T

Description	Order Symbol	Code
Grey door, 2-point locking, hinges on the long side	ARCA 604021	**8120012**
Grey door, 2-point locking, hinges on the long side, without mountingplate	ARCA 604021 No MP	**8120012N**
Grey door, Swinghandle, hinges on the long side	ARCA 604021S	**8120092**
Grey door, Swinghandle, hinges on the long side, without mountingplate	ARCA 604021S No MP	**8120092N**
Transparent door, 2-point locking, hinges on the long side, with mountingplate	ARCA 604021T	**8121012**
Transparent door, 2-point locking, hinges on the long side, without mountingplate	ARCA 604021T No MP	**8121012N**
Transparent door, Swinghandle, hinges on the long side, with mountingplate	ARCA 604021ST	**8121092**
Transparent door, Swinghandle, hinges on the long side, without mountingplate	ARCA 604021ST No MP	**8121092N**

NO MP = no mounting plate

Cabinet base, door with PUR gasket, mounting plate, screws for mounting plate. 3mm double bit lock(s) with key.
S versions with swinghandle 2-point locking system. Door guide included.

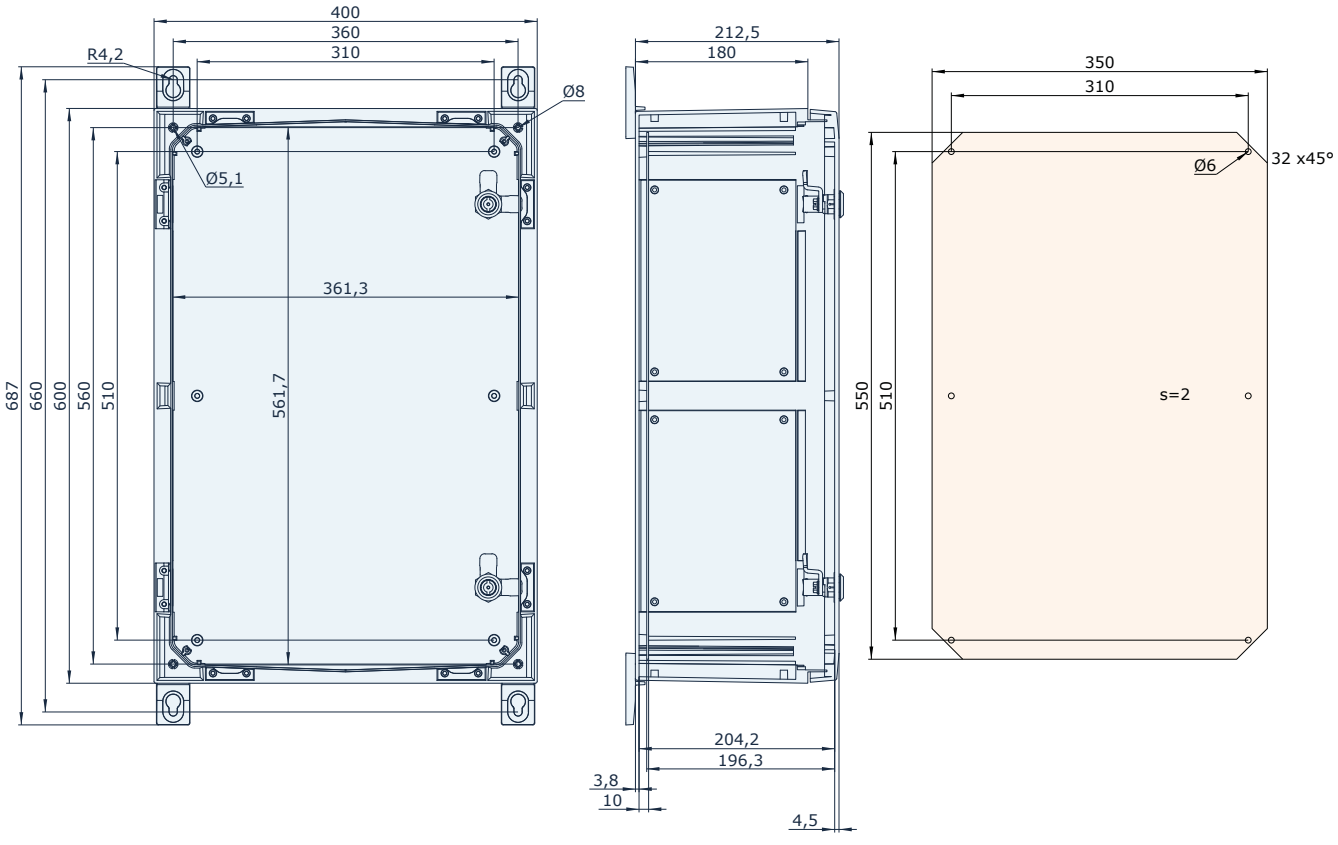

ARCA IEC

Accessories

	Description	Order Symbol	Code
	Mounting plate (550x350x2 mm) Galvanized steel, for size 400x600/600x400	MPS ARCA 6040	**8120736**
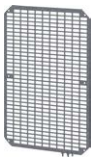	Mounting plate perforated (550x350x2 mm - 26x11 mm) Galvanized steel, for size 600x400	MPP ARCA 6040	**8120756**
	Mounting plate multiperforated (550x350x2 mm - ø3.6 mm) Galvanized steel, for size 400x600/600x400	MPMP ARCA 6040	**8120925**
	Mounting plate (550x350 mm) Isolated, for size 400x600/600x400	MPX ARCA 6040	**8120746**
	Inner door set Galvanized steel door frames, door from aluminium, RAL 7035, for size 600x400x210	IDS ARCA 6040	**8120716**
	DIN rail frame set 3 rows x 16 modules, for size 600x400x210	DRS ARCA 604021	**8120770**
	Rain canopy set for size 6040	RCS ARCA 6040	**8120948**
	PoleMounting kit, for pole ø100-300mm For sizes 300x400, 500x400, 600x400	PMK ARCA 40	**8120842**
	Door stopper ARCA, vertical, left, small 2030-6040	DSP ARCA VLS	**8120960**
	Door stopper ARCA, vertical, right, small 2030-6040	DSP ARCA VRS	**8120961**
	Wall mounting lugs set for 2030-6040 Adds 10 mm between wall and cabinet	WMK ARCA 10 SMALL	**8120830**
	Wall mounting lugs set for 2030-6040 Adds 40 mm between wall and cabinet	WMK ARCA 40 SMALL	**8120831**
	Plastic Wall mounting lugs set for 2030-6040 Adds 10 mm between wall and cabinet	WMKQ10S	**8120832**
	Plastic Wall mounting lugs set for 2030-6040 Adds 50 mm between wall and cabinet	WMKQ50S	**8120833**
	Corner adjustment set For sizes with depth 210	CBS ARCA 21	**8120811**

ARCA IEC

HxWxD: 600 x 800 x 300 mm



ARCA 608030



ARCA 608030S



ARCA 608030W

Description	Order Symbol	Code
Grey door, 2-point locking, hinges on the short side	ARCA 608030	**8120029**
Grey door, 2-point locking, hinges on the short side, without mountingplate	ARCA 608030 No MP	**8120029N**
Grey door, Swinghandle, hinges on the short side	ARCA 608030S	**8120109**
Grey door, Swinghandle, hinges on the short side, without mountingplate	ARCA 608030S No MP	**8120109N**
Grey door with window, 2-point locking, hinges on the short side	ARCA 608030W	**8120149**
Grey door with window, 2-point locking, hinges on the short side, without mountingplate	ARCA 608030W No MP	**8120149N**

NO MP = no mounting plate

Cabinet base, door with PUR gasket, mounting plate, screws for mounting plate. 3mm double bit lock(s) with key.
S versions with swinghandle 2-point locking system. Door guide included.

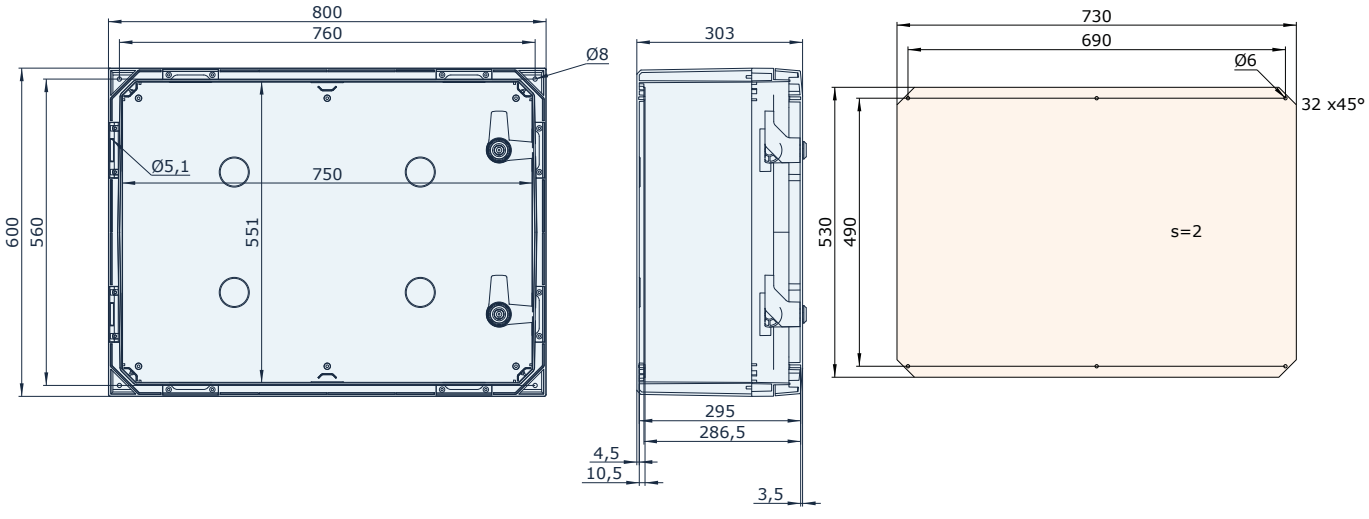

ARCA IEC

Accessories

	Description	Order Symbol	Code
	Mounting plate (730x530x2 mm) Galvanized steel, for size 600x800/800x600	MPS ARCA 8060	**8120739**
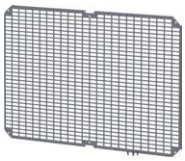	Mounting plate perforated (730x530x2 mm - 26x11 mm) Galvanized steel, for size 600x800	MPP ARCA 6080	**8120935**
	Mounting plate multiperforated (730x530x2 mm - ø3.6 mm) Galvanized steel, for size 600x800/800x600	MPMP ARCA 8060	**8120928**
	Mounting plate (730x530 mm) Isolated, for size 600x800/800x600	MPX ARCA 8060	**8120749**
	Inner door set Galvanized steel door frames, door from aluminium, RAL 7035, for size 600x800x300	IDS ARCA 6080	**8120915**
	DIN rail frame set 3 rows x 37 modules, for size 600x800x300	DRS ARCA 608030	**8120800**
	Rain canopy set for size 6080	RCS ARCA 6080	**8120949**
	Plastic rain canopy set for size 800mm width	RCSQ ARCA 80	**8120976**
	PoleMounting kit, for pole ø100-300mm For size 600x800	PMK ARCA 80	**8120846**
	Door stopper ARCA, right, midsize 5070-8060	DSP ARCA RM	**8120965**
	Door stopper ARCA, left, midsize 5070-8060	DSP ARCA LM	**8120964**
	Wall mounting lugs set for 5070-8060 Adds 10 mm between wall and cabinet	WMK ARCA 10 MID	**8120904**
	Wall mounting lugs set for 5070-8060 Adds 40 mm between wall and cabinet	WMK ARCA 40 MID	**8120905**
	Plastic Wall mounting lugs set for 5070-8060 Adds 10 mm between wall and cabinet	WMKQ10M	**8120834**
	Plastic Wall mounting lugs set for 5070-8060 Adds 50 mm between wall and cabinet	WMKQ50M	**8120835**
	Corner adjustment set For sizes with depth 300	CBS ARCA 30	**8120812**

ARCA IEC

HxWxD: 700 x 500 x 300 mm



ARCA 705030



ARCA 705030S



ARCA 705030W

Description	Order Symbol	Code
Grey door, 2-point locking, hinges on the long side	ARCA 705030	**8120017**
Grey door, 2-point locking, hinges on the long side, without mountingplate	ARCA 705030 No MP	**8120017N**
Grey door, Swinghandle, hinges on the long side	ARCA 705030S	**8120097**
Grey door, Swinghandle, hinges on the long side, without mountingplate	ARCA 705030S No MP	**8120097N**
Grey door with window, 2-point locking, hinges on the long side	ARCA 705030W	**8120137**
Grey door with window, 2-point locking, hinges on the long side, without mountingplate	ARCA 705030W No MP	**8120137N**

NO MP = no mounting plate

Cabinet base, door with PUR gasket, mounting plate, screws for mounting plate. 3mm double bit lock(s) with key.
S versions with swinghandle 2-point locking system. Door guide included.

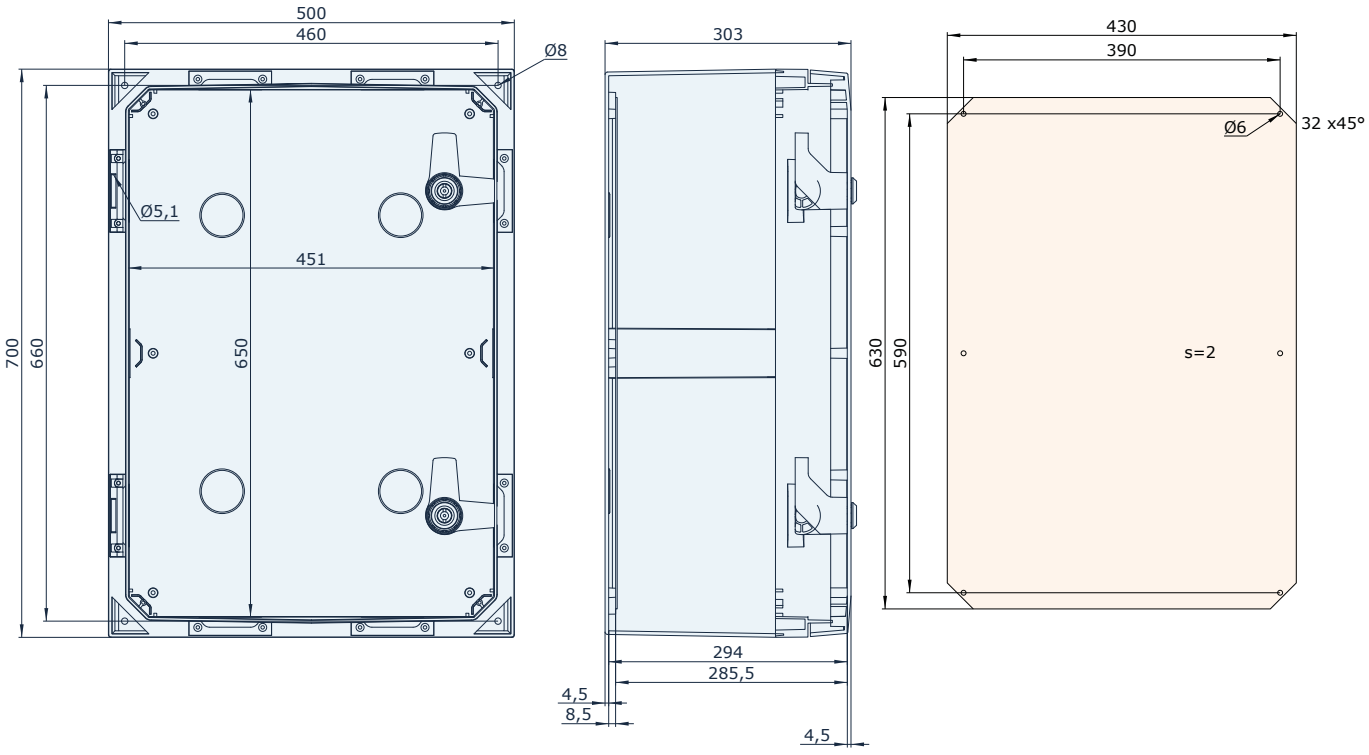

ARCA IEC

Accessories

	Description	Order Symbol	Code
	Mounting plate (630x430x2 mm) Galvanized steel, for size 500X700/700x500	MPS ARCA 7050	**8120738**
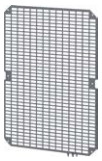	Mounting plate perforated (630x430x2 mm - 26x11 mm) Galvanized steel, for size 700x500	MPP ARCA 7050	**8120758**
	Mounting plate multiperforated (630x430x2 mm - ø3.6 mm) Galvanized steel, for size 500x700/700x500	MPMP ARCA 7050	**8120927**
	Mounting plate (630x430 mm) Isolated, for size 500x700/700x500	MPX ARCA 7050	**8120748**
	Inner door set Galvanized steel door frames, door from aluminium, RAL 7035, for size 700x500x300	IDS ARCA 7050	**8120718**
	DIN rail frame set 4 rows x 21 modules, for size 700x500x300	DRS ARCA 705030	**8120775**
	Rain canopy set for size 7050	RCS ARCA 7050	**8120951**
	Plastic rain canopy set for size 500mm width	RCSQ ARCA 50	**8120973**
	PoleMounting kit, for pole ø100-300mm For sizes 400x500, 700x500	PMK ARCA 50	**8120843**
	Door stopper ARCA, right, midsize 5070-8060	DSP ARCA RM	**8120965**
	Door stopper ARCA, left, midsize 5070-8060	DSP ARCA LM	**8120964**
	Wall mounting lugs set for 5070-8060 Adds 10 mm between wall and cabinet	WMK ARCA 10 MID	**8120904**
	Wall mounting lugs set for 5070-8060 Adds 40 mm between wall and cabinet	WMK ARCA 40 MID	**8120905**
	Plastic Wall mounting lugs set for 5070-8060 Adds 10 mm between wall and cabinet	WMKQ10M	**8120834**
	Plastic Wall mounting lugs set for 5070-8060 Adds 50 mm between wall and cabinet	WMKQ50M	**8120835**
	Corner adjustment set For sizes with depth 300	CBS ARCA 30	**8120812**

ARCA IEC

HxWxD: 800 x 600 x 300 mm



ARCA 806030



ARCA 806030S



ARCA 806030W

Description	Order Symbol	Code
Grey door, 2-point locking, hinges on the long side	ARCA 806030	**8120019**
Grey door, 2-point locking, hinges on the long side, without mountingplate	ARCA 806030 No MP	**8120019N**
Grey door, Swinghandle, hinges on the long side	ARCA 806030S	**8120099**
Grey door, Swinghandle, hinges on the long side, without mountingplate	ARCA 806030S No MP	**8120099N**
Grey door with window, 2-point locking, hinges on the long side	ARCA 806030W	**8120139**
Grey door with window, 2-point locking, hinges on the long side, without mountingplate	ARCA 806030W No MP	**8120139N**

NO MP = no mounting plate

Cabinet base, door with PUR gasket, mounting plate, screws for mounting plate. 3mm double bit lock(s) with key.
S versions with swinghandle 2-point locking system. Door guide included.

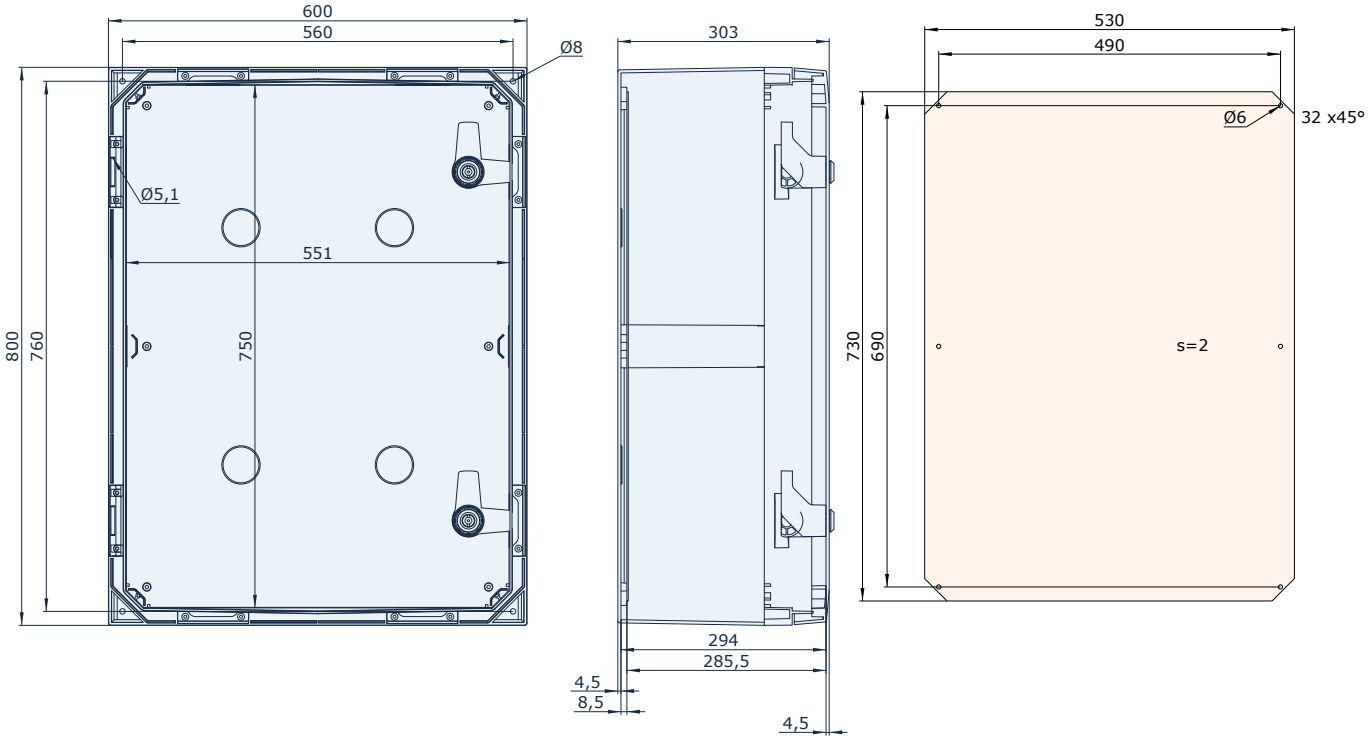

ARCA IEC

Accessories

	Description	Order Symbol	Code
	Mounting plate (730x530x2 mm) Galvanized steel, for size 600x800/800x600	MPS ARCA 8060	**8120739**
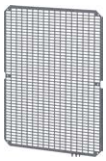	Mounting plate perforated (730x530x2 mm - 26x11 mm) Galvanized steel, for size 800x600	MPP ARCA 8060	**8120759**
	Mounting plate multiperforated (730x530x2 mm - ø3.6 mm) Galvanized steel, for size 600x800/800x600	MPMP ARCA 8060	**8120928**
	Mounting plate (730x530 mm) Isolated, for size 600x800/800x600	MPX ARCA 8060	**8120749**
	Inner door set Galvanized steel door frames, door from aluminium, RAL 7035, for size 800x600x300	IDS ARCA 8060	**8120719**
	DIN rail frame set 4 rows x 26 modules, for size 800x600x300	DRS ARCA 806030	**8120777**
	Rain canopy set for size 8060	RCS ARCA 8060	**8120950**
	PoleMounting kit, for pole ø100-300mm For sizes 400x600, 800x600	PMK ARCA 60	**8120844**
	Door stopper ARCA, right, midsize 5070-8060	DSP ARCA RM	**8120965**
	Door stopper ARCA, left, midsize 5070-8060	DSP ARCA LM	**8120964**
	Wall mounting lugs set for 5070-8060 Adds 10 mm between wall and cabinet	WMK ARCA 10 MID	**8120904**
	Wall mounting lugs set for 5070-8060 Adds 40 mm between wall and cabinet	WMK ARCA 40 MID	**8120905**
	Plastic Wall mounting lugs set for 5070-8060 Adds 10 mm between wall and cabinet	WMKQ10M	**8120834**
	Plastic Wall mounting lugs set for 5070-8060 Adds 50 mm between wall and cabinet	WMKQ50M	**8120835**
	Corner adjustment set For sizes with depth 300	CBS ARCA 30	**8120812**
	Plastic rain canopy set for size 600mm width	RCSQ ARCA 60	**8120974**

ARCA IEC

Additional accessory

Wall mounting lugs set

	Description	Order Symbol	Code
	Wall mounting lugs set for 2030-6040 Adds 10 mm between wall and cabinet	WMK ARCA 10 SMALL	**8120830**
	Wall mounting lugs set for 2030-6040 Adds 40 mm between wall and cabinet	WMK ARCA 40 SMALL	**8120831**
	Wall mounting lugs set for 5070-8060 Adds 10 mm between wall and cabinet	WMK ARCA 10 MID	**8120904**
	Wall mounting lugs set for 5070-8060 Adds 40 mm between wall and cabinet	WMK ARCA 40 MID	**8120905**
	Plastic Wall mounting lugs set for 2030-6040 Adds 10 mm between wall and cabinet	WMKQ10S	**8120832**
	Plastic Wall mounting lugs set for 2030-6040 Adds 50 mm between wall and cabinet	WMKQ50S	**8120833**
	Plastic Wall mounting lugs set for 5070-8060 Adds 10 mm between wall and cabinet	WMKQ10M	**8120834**
	Plastic Wall mounting lugs set for 5070-8060 Adds 50 mm between wall and cabinet	WMKQ50M	**8120835**

Corner adjustment set

	Description	Order Symbol	Code
	Corner adjustment set For sizes with depth 150	CBS ARCA 15	**8120810**
	Corner adjustment set For sizes with depth 210	CBS ARCA 21	**8120811**
	Corner adjustment set For sizes with depth 300	CBS ARCA 30	**8120812**

ARCA IEC

Additional accessory

Locking inserts

	Description	Order Symbol	Code
	Locking insert Double-bit 3mm for 2030-6040	LIS ARCA DB3	**8120860**
	Locking insert Double-bit 3mm for 5070-8060	LIS ARCA DB3 MID	**8120980**
	Locking insert Square 7mm for 2030-6040	LIS ARCA S7	**8120861**
	Locking insert Square 7mm for 5070-8060	LIS ARCA S7 MID	**8120981**
	Locking insert Square 8mm for 2030-6040	LIS ARCA S8	**8120862**
	Locking insert Square 8mm for 5070-8060	LIS ARCA S8 MID	**8120982**
	Locking insert Triangular 8mm for 2030-6040	LIS ARCA T8	**8120863**
	Locking insert Triangular 8mm for 5070-8060	LIS ARCA T8 MID	**8120983**
	Locking insert for padlock with handle for 2030-6040	LIS ARCA padlock handle	**8120850**
	Locking 1242E system for 2030-6040	LIS ARCA 1242E wingknob	**8120865**
	Locking 1242E system for 5070-8060	LIS ARCA 1242E MID wingknob	**8120985**
	Locking V2432E system for 2030-6040	LIS ARCA V2432E wingknob	**8120866**
	Locking V2432E system for 5070-8060	LIS ARCA V2432E MID wingknob	**8120986**
	Locking 455E system for 2030-6040	LIS ARCA 455E wingknob	**8120867**
	Locking 455E system for 5070-8060	LIS ARCA 455E MID wingknob	**8120987**
	Locking 405E system for 2030-6040	LIS ARCA 405E wingknob	**8120868**
	Locking 405E system for 5070-8060	LIS ARCA 405E MID wingknob	**8120988**

ARCA IEC

Additional accessory

Half cylinder locks for swinghandle

	Description	Order Symbol	Code
	Half cylinder locking Double-bit 3mm	CLI ARCA DB3	**8120870**
	Half cylinder locking Square 7mm	CLI ARCA S7	**8120871**
	Half cylinder locking Square 8mm	CLI ARCA S8	**8120872**
	Half cylinder locking Triangular 8mm	CLI ARCA T8	**8120873**
	Half cylinder locking 1242E system	CLI ARCA 1242E	**8120875**
	Half cylinder locking V2432E system	CLI ARCA V2432E	**8120876**
	Half cylinder locking 455E system	CLI ARCA 455E	**8120877**
	Half cylinder locking 405E system	CLI ARCA 405E	**8120878**

Keys

	Description	Order Symbol	Code
	Plastic key for ARCA IEC DB3	MB 12235 KEY	**8392235**
	Metal key for ARCA IEC DB3	ARCA METAL KEY DB	**8120836**

Coupling set

	Description	Order Symbol	Code
	Coupling Flange For connecting cabinets	CFS ARCA	**8120820**

Hinge set

	Description	Order Symbol	Code
	Hinge set small For sizes 200x300-600x400	FHS S ARCA	**8120891**
	Hinge set medium For sizes 500x700-800x600	FHS M ARCA	**8120892**

Notes

Notes

Notes

One Global Network

EUROPE

FINLAND **Fibox Oy Ab**	Keilaranta 17c 02150 Espoo	Phone: Fax: E-Mail:	+358 207 785 700 +358 207 785 702 info@fibox.fi
DENMARK **Fibox A/S**	Taastrup Hovedgade 101, 1. sal, 2630 Taastrup	Phone: Fax: E-Mail:	+45 4371 8055 +45 43 71 80 35 ordre@fibox.com
GERMANY **Fibox GmbH**	Rehwinkel 30 32457 Porta Westfalica	Phone: Fax: E-Mail:	+49 5731 86946 0 +49 5731 86946 50 infode@fibox.com
FINLAND **Fibox Tested Systems Oy**	Hovinpelto 2 74700 Kiuruvesi	Phone: Fax: E-Mail:	+358 207 785 700 +358 207 785 851 info@fibox.fi
FRANCE **Fibox France SARL**	28, rue Paul Henri Spaak Parc de l'Esplanade 77400 Saint Thibault des Vignes	Phone: Fax: E-Mail:	+33 1 60 21 17 17 +33 16021 17 18 service.client@fibox.com
GREAT BRITAIN **Fibox Ltd**	Pemberton House 3, Suite 12, Stafford Park 1, Telford, Shropshire, England, GB TF33BD	Phone: Fax: E-Mail:	+44 1642 604 400 +44 1642 604 600 salesuk@fibox.com
NETHERLANDS **Fibox Benelux**	Postbus 350 7570 AJ Oldenzaal	Phone: Fax: E-Mail:	+31 541 539039 +31 541 533399 info@fibox.nl
POLAND **Fibox Sp. z o.o.**	ul. Dzięcioła 19 04-988 Warszawa	Phone: Fax: E-Mail:	+48 22 256 57 99 +48 22 256 57 90 info@fibox.pl
SWEDEN **Fibox AB**	Borgvägen 7 74571 Enköping	Phone: Fax: E-Mail:	+46 8 792 2670 +46 8 792 0164 orderse@fibox.com
SWISS **Fibox (Schweiz) GmbH**	Neubrunnstraße 1 9205 Waldkirch (SG)	Phone: Fax: E-Mail:	+41 55 617 20 80 +41 55 617 20 89 info.ch@fibox.com

AMERICA

USA **Fibox Inc.**	810 Cromwell Park Drive, Suite R, Glen Burnie MD 21061	Phone: Fax: E-Mail:	+1 410 760 9696 +1 410 760 8686 sales@fiboxusa.com

ASIA

CHINA
Fibox Shanghai Ltd.

2A, 2nd Floor, Block No. 55-56
461 Hongcao Road
Shanghai 200233

Phone: +86 21 6495 9922
Fax: +86 21 6495 9667
E-Mail: fibox@kornet.net

CHINA
Fibox (Guangzhou)
Engineering Plastic Co., Ltd

No.36 Dongpeng Blvd, Huangpu, Guangzhou,
Guangdong Province,
China, 510730

Phone: +86 20 3206 7660
Fax: +86 20 3206 7661

INDIA
Fibox India Private Limited

Gat No. 868, Vanraj Wasti, Mahindra Nighoje Road-
Village – Nighoje, Taluka – Khed, District Pune
Maharashtra 410501

Phone: +91 02135 666777
Fax: +91 02135 666789
E-Mail: viren.shah@fibox.com

JAPAN
Fibox Japan Office

Zip# 542-0081 303, Daiwa building,
2-4-19, Minamisenba,
Chuo-Ku, Osaka

Phone: +81 6 4963 3752
Fax: +81 6 4963 3762
E-Mail: m.takeda@fibox.co.jp

SOUTH KOREA
Fibox Ltd (Korea)

11-25, Songdo-dong
Yeonsu-gu, Incheon

Phone: +82 32 814 6742
Fax: +82 32 814 6077
E-Mail: sales@fibox.co.kr

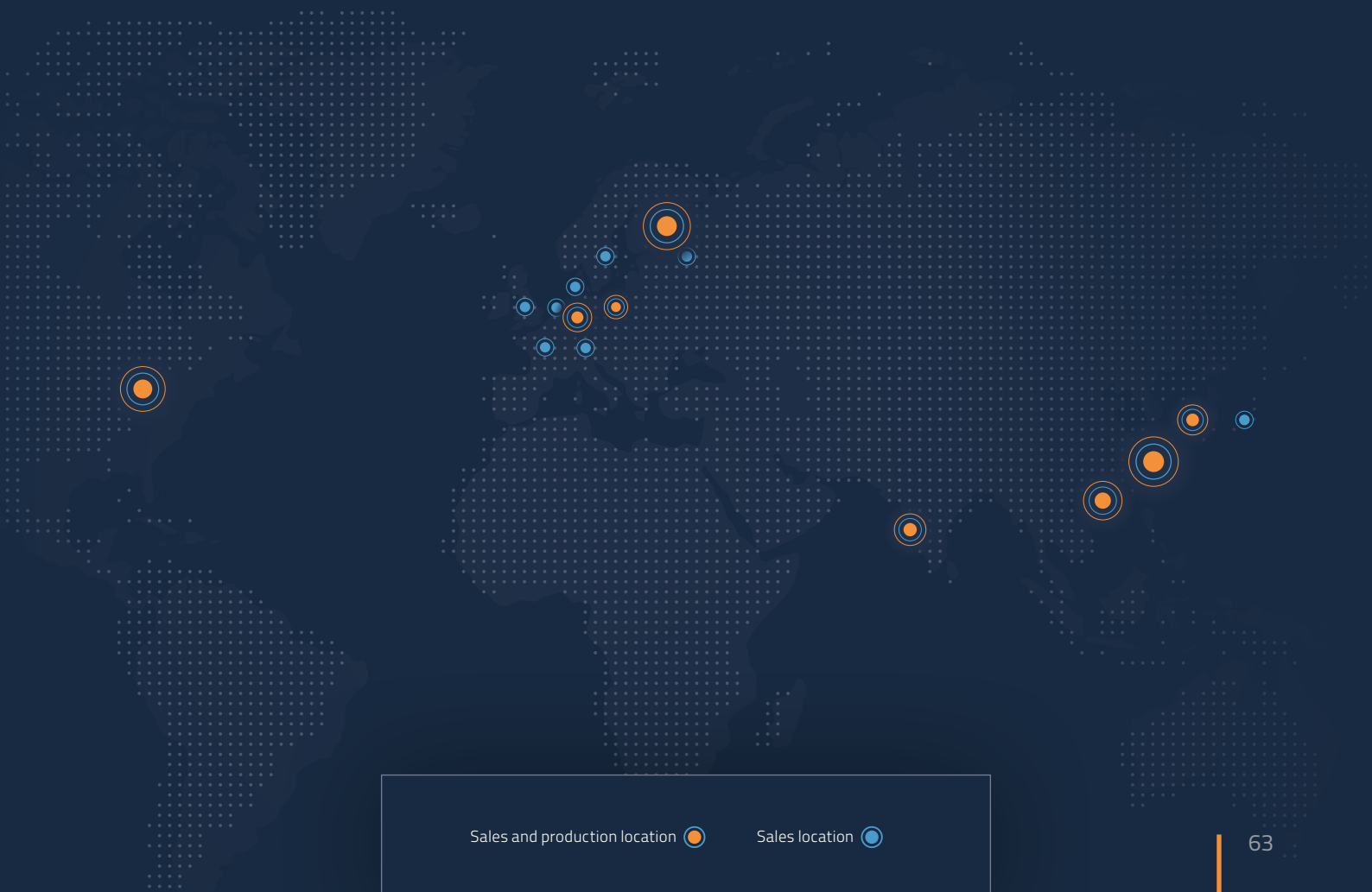

FIBOX

Enclosing innovations



WWW.FIBOX.COM

ARCA IEC catalogue Nov. 2026 EN
9637336

6 418074 323255