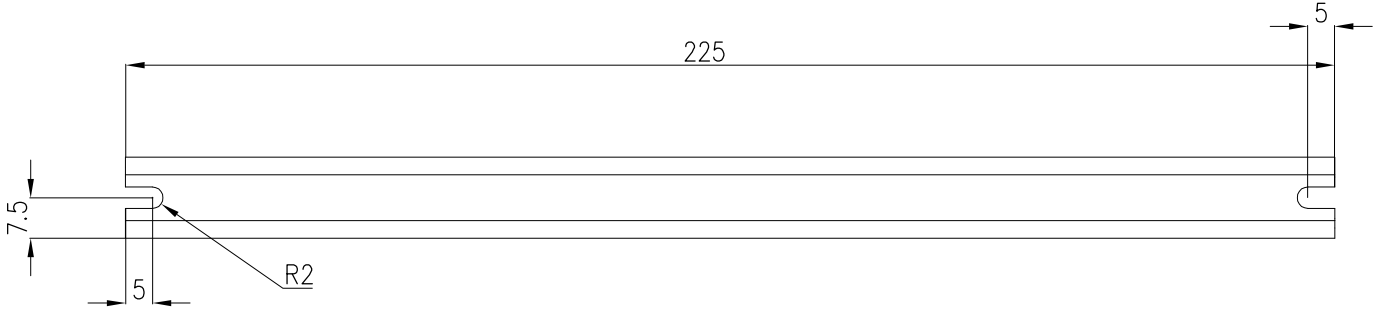
225
5
7.5
5
R2

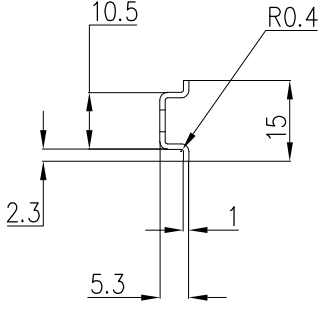
10.5
R0.4
15
2.3
1
5.3